Logic Diagram Workshop

Basic Logic Concepts

Instructor:

- David Sellers
- Senior Engineer
- Facility Dynamics Engineering

Writing it All Down

- Documenting your sequence is an *Excellent* idea
- Using the English language to do it may provide a few challenges

Clear Communication is Important

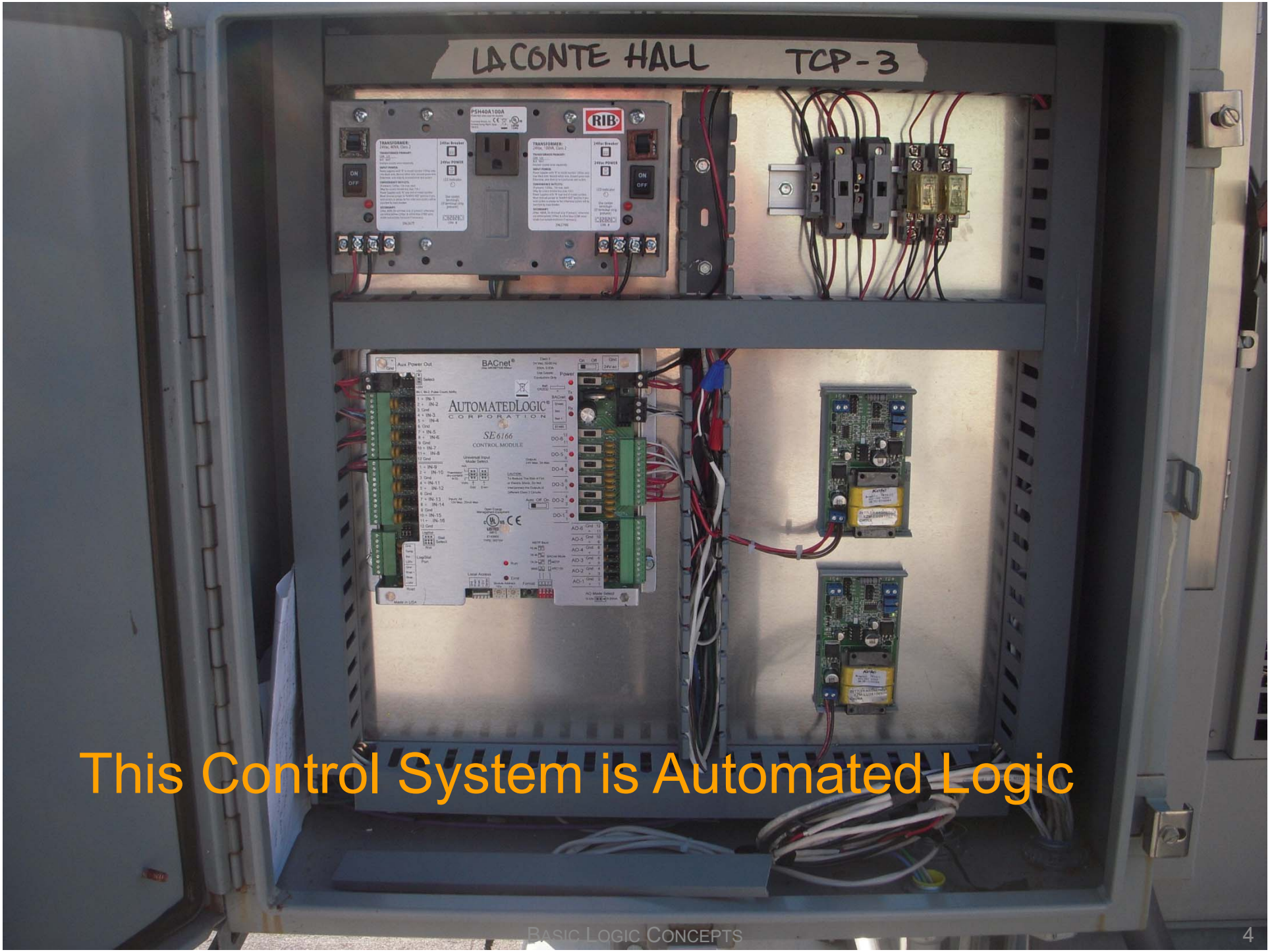

This Control System is Automated Logic

This Control System is Automated Logic

But in the general sense, so is this one

This Control System is Automated Logic

But in the general sense, so is this one, and this one

Consider Writing it All Down in the Form of a Logic Diagram

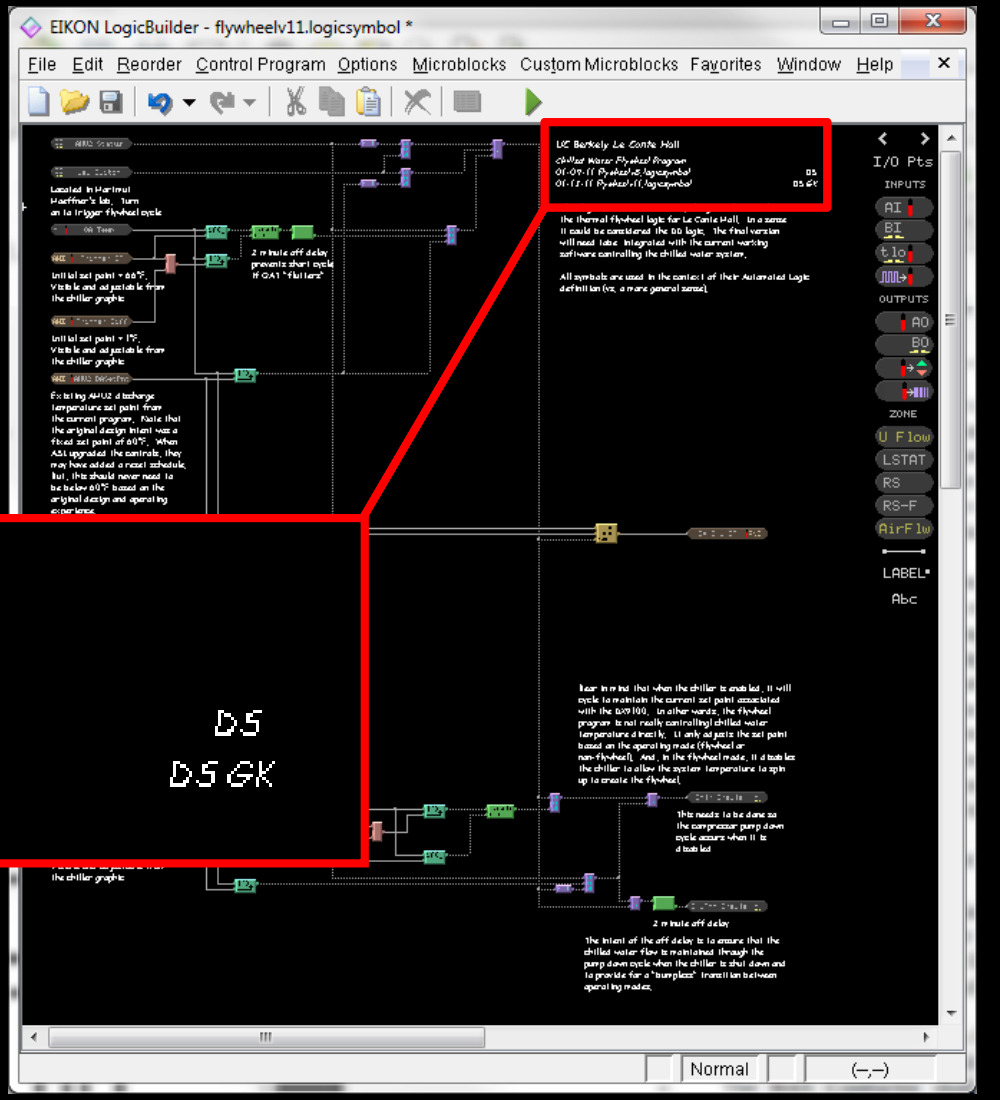

UC Berkely Le Conte Hall

Chilled Water Flywheel Program

01-09-11 flywheelv8.logicsymbol D5

01-13-11 flywheelv11.logicsymbol D5 GK

Consider Writing it All Down in the Form of a Logic Diagram

- As early as 1968, standards were developed for documenting computer logic using flow charts (ANSI X3.5 – 1968)
- In 1974, functional testing demonstrated this was a good idea (also demonstrated that a flow chart in reverse is a trouble shooting diagram)
- Current version – ANSI – AIIM – 4 – 1987
- Microsoft Office has standard shapes built in to the drawing tools drop down menu

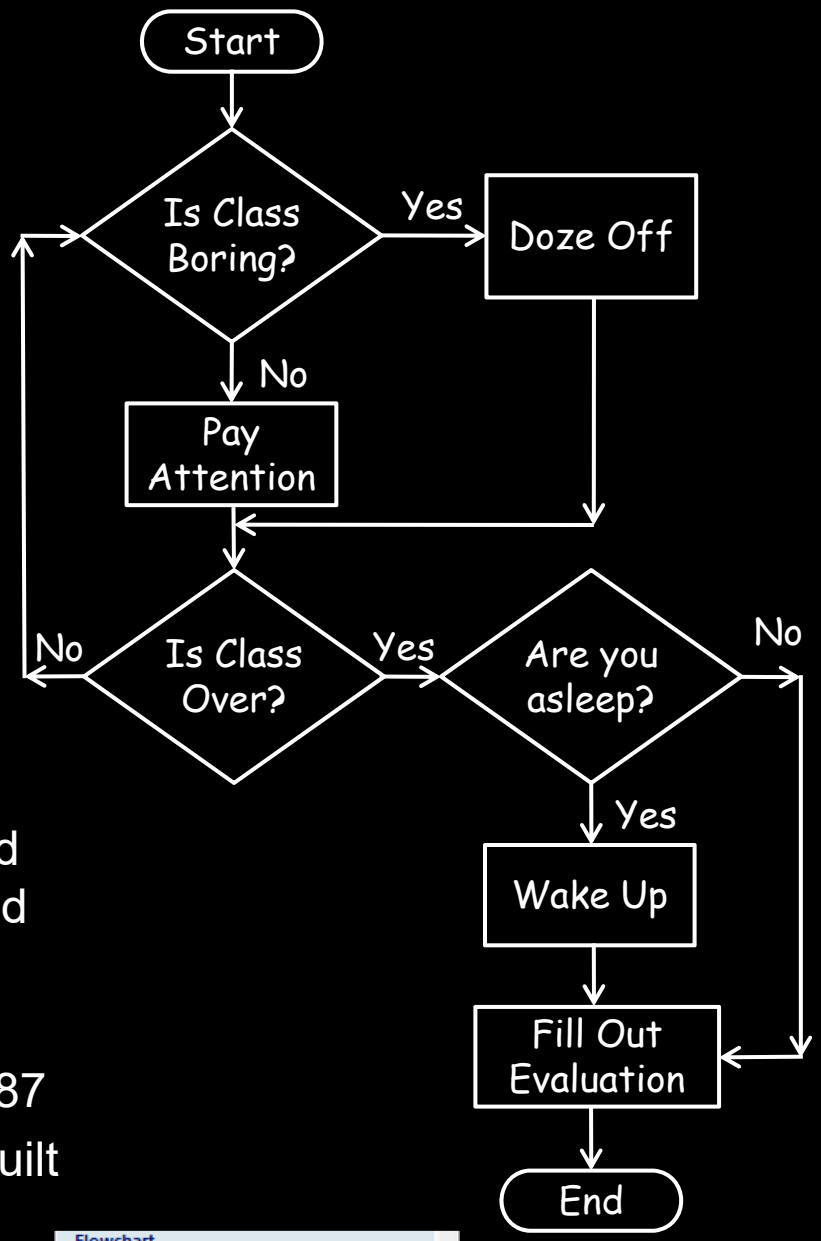

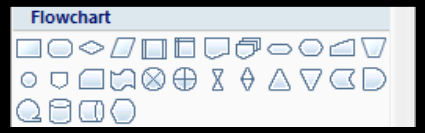

A Picture's Worth a Thousand Words

(And also Thousands of Dollars)

UCB SOO 4-26-2010

BAA UC SOO Air Balance Guide Line Converting from CFM to Pressurization Control.

A. Assumptions used in the UCB SOO Matrix

1. Room differential transmitter(s) need to be added to the two GAS BUNKERS to give room DP control to exhaust fans ((EF-3&4). Coordinate with Mark Lesko about how and where sensors to be located to provide the GAS BUNKER DP control for both GAS BUNKERS. It may be necessary to use one GAS BUNKER DP to control the DP and flows to both GAS BUNKERS.

2. The Air Balance Report published leakage air flows test that measured the air leakage from the FAB L3M & L5 along the measured FAB room differential pressure. These two values were used to calculate the FAB crack area. This FAB crack area was used with an equation that uses the room crack area and desired room differential pressure to calculate the amount of air flow required to maintain a specific room differential pressure.

3. This equation was used to approximate the FAB and GAS BUNKER resulting room differential pressures that could be expected by setting a constant exhaust flow from exhaust fans(EF-1 & 2) and use the equation to approximate the required air flow from the make-up air handlers(AHU-1A & 1B) and the required exhaust flow from exhaust fans(EF-3 & 4) needed to generate desirable room differential pressures in the FAB and Gas Bunker.

4. A differential pressure of ±0.01 "W.C equates to about 1 lb/sq.ft on a door. Design objective try and keep a person from being exposed to a door opening force in excess of 15 lbs force(about a differential pressure of ±0.15"W.C for a standard door).

5. A normal 20 sq.ft door can be expected to provide at least a 6 lb force against a negative room pressure of –0.04"W.C. Most standard door closures start to have resistance to that may be increased or decreased at the time of balance if undesirable exhaust and make-up air flow result from the DPs.

6. The FAB L3M & L5 are both about (14,480 sq.ft say 15,000 sq.ft). The design ventilation rate for this area is 4 cfm/sq.ft. This equates to about a combined 60,000 cfm air flow for exhaust fans(EF-1 & 2).

7. The GAS BUNKERS for L3M & L5 are both about (561 sq.ft say 600 sq.ft). The two rooms set-up to give a low flow warning at 10 cfm/sq.ft and a tool gas shutdown at 7 cfm/sq.ft.

8. Air flow goal for the GAS BUNKERS is to prevent pyrophoric gases exfiltrating out of the GAS BUNKERS into the FAB and to provide acceptable ventilation rates. This means that exhaust fans(EF-3 & 4) have to run at a speed signal high enough to maintain a negative pressure in the GAS BUNKERS working against the make-up and exhaust air flows contributed to the GAS BUNKERS from air handlers(AHU-1A & 1B) and exhaust fans(EF-1 & 2) and maintain a ventilation air flow rate in the GAS BUNKER above 10 cfm/sq.ft (close to 16 cfm/sq.ft if possible) without generating a door opening force in excess of 15 lbs.

9. The FAB make-up air handlers(AHU-1A & 1B) and the GAS BUNKER exhaust fans (EF-3 & 4) to have their control logic changed from controlling to a constant air flow value to controlled to maintain a room DP. This change in control philosophy means that the FAB and GAS BUNKER ventilation rates shall be determined by the exhaust fan(EF-1 & 2) fixed speed setting and the make-up air handlers(AHU-1A & 1B) and exhaust fans(EF-3 & 4) shall respond to the fixed exhaust fan(EF-1 & 2) flow rate to maintain a positive room DP in the FAB and a negative room DP in the GAS BUNKERS.

Comment [RJS1]: The only resulting exhaust airflow that could be controlled with the GAS BUNKER DP would be that of EF-3 & 4. If this value is modified to reflect room pressure, care must be taken that this value does not reduce the available exhaust at the pyrophoric gas cabinets below the "…200 FPM across all valves & fittings (Gas Cabinet Footprint, not window)…".

Additionally, the "Alarm Point" airflow documented in the TAB report is 17% of design (3"') and 16% (5"') of the airflow delivered at design operation. It is highly unlikely that the proportional balance of the AHU-1 system will persist across such a large operational range, making a DP control system important to maintain the Bunkers at an acceptable room pressure level.

Comment [RJS2]: To obtain the actual "Crack Area" or Bldg Envelope Cv would require that the actual airflows of AHU-1A & 1B, EF-1, 2 & 3 were measured concurrently with one another AND the Fab Pressure. It appears that these critical measurements were actually measured as follows:

AHU-1A&1B – Pre-Filter Traverses March 25, 09
AHU-1A&1B – RHC Traverses March 11, 09
EF-1 & 2 – Traverses February 25, 09
EF-1 & 2 – Gas Cabinets June 15, 09
EF-3 & 4 – Traverse March 9, 09
Room Pressure Testing May 15, 09

IES and RSA should collaborate to ensure the actual measurements contained in the TAB report can be used in the manner required.

Comment [RJS3]: Based on my experience (Far from Authoritative or compelling) these are reasonable values HOWEVER I have seen departures from these norms based on several factors (envelope leakage, door weight, door opening hardware, etc.) that can negate the most careful calculations. This makes the Airflow/Room Pressure relationship an extremely important value, imperative to be accurate (See previous note)

Comment [RJS4]: Because there is nothing to vary the flow of air from AHU-1A & 1B from one area to another, the key point of failure in the Bunkers will be the point at which the ratio of Exhaust/Supply changes. How far this area operates into this ratio in "Normal" mode (Room Pressure) may indicate that there isn't much play before the system(s) need to be shut down.

Comment [RJS5]: Will the EF's exhausting the GC's be operating to control room pressure at all times, even during "Normal" situations? This will be a little tricky as the GC's must be maintained correctly during normal operation regardless of the room pressure as mentioned in previous notes.

Also, is it possible that the minimum allowable exhaust airflow (200 FPM over the cabinet footprint) of the pyrophoric Gas Cabinets may be reached before the minimum ventilation rate is reached?

10. The values shown in SOO Matrix are estimated values for air flows resulting room DPs and are intended rough order of magnitude values to asset in giving the Air Balancer rough order of magnitude values that can be compared to actual values and act as a starting point to balance to FAB air flow and room DPs that shall maintain acceptable ventilation rates in the FAB and GAS BUNKERS without creating room DPs too high to impede personnel evacuation in the event of evacuation alarms.

11. (E) control interlocks, isolation damper positions, proof of flow minimum and maximum set-points for air handlers(AHU-1A & 1B) and exhaust fans(EF-1 thru 4) to remain as programmed for the (N) differential pressure control logic to be implemented. Refer to each of the matrix operating scenarios and modify (E) programming, if necessary, to correct air handler(AHU-1A &1B) and exhaust fan (EF-1 thru 4) isolation damper operation as shown in each of the matrix isolation damper columns. . Refer to the matrix column for shutdown control of the recirculating air handlers(RACUs) for each of the matrix events. Refer to the NARRATIVE SITUATION SUMMARY column for each scenario. Also refer to the last column of the matrix for comments about whether or not an event initiates lab evacuation.

12. While maintaining the fixed exhaust air flow rates for EF-1&2 given under NORMAL OPERATIONS, objective is to provide a positive room pressure differential in the FAB with respect to outside hallway and at the same time provide a negative room pressure differential between the GAS BUNKER and the FAB to prevent the possibility of exfiltrating pyrophoric gases from the GAS BUNKERS into the FAB.

.

B. Air Balance Set-up & Start-up Proceedure :

1. Once all control changes have been completed and initial programming to allow start-up to proceed completed and before there has been any changes to (E) air handler and exhaust fan speed set-points the air handlers(AHU-1A & 1B) and exhaust fans(EF-1 thru 4) should be started –up and allowed to operate under the (N) control logic. Any obvious corrections should be made.

2. Operating in the NORMAL OPERATING MODE the measured operating air flows and room DPs should be compared to the SOO Matrix(3-26-2010) calculated values. This information should be evaluated to determine what initial corrective action in operating set-points necessary.

3. The first step is to establish the exhaust fan(EF-1 & 2) air flow set-point. During NORMAL OPERATION: both exhaust fans (EF-1 & 2) are set-up to run in parallel at three fixed VFD speed signals. The FIRST FIXED VFD SPEED SIGNAL programmed to provide the constant air flow cfm that provides the design air flow of at least 4 cfm/sq.ft Matrix value is –39,000 cfm for both fans. The SECOND FIXED VFD SPEED SIGNAL is the maximum speed signal for any one exhaust fan to run at -60,000 cfm each.This assures that during an out of service event for exhaust fan(EF-1 or 2) the minimum ventilation rate at 4 cfm/sq.ft for the FAB L3M & L5 shall be maintained. The THIRD FIXED VFD SPEED SIGNAL is a minimum air flow set-point to run exhaust fan(EF-1 or 2) to provide minimal ventilation -12,000 cfm in the FAB without creating too prohibitive negative FAB room DP in the event both air handlers(AHU-1A & 1B) go out of service Changeover from the three fixed VFD speed signals have to include control interface with all equipment affected by the speed signal change-over and ample time for required isolation damper operation and proof of flow to take place. Also the BAS needs to be programmed to be informed of all NORMAL and ALARM MODES that take place.

Comment [RJS6]: The limits of operation must be clearly identified up front. The actual operational parameters necessary to produce the desired Fab Pressure/Bunker Pressure in each mode can be physically determined by overriding fans & devices (TAB & Siemens) and the variable measured and documented in each SOO Mode. If an operational limit must be crossed to obtain a specified condition, the system(s) must be re-evaluated to see what modifications are necessary and will not affect the other SOO Modes.

Comment [RJS7]: The proof of flow using the flow stations may not be a practical consideration as the SOO Modes of operation wreak havoc with air velocity and direction in the ductwork. Consider use of VFD "Status" (NOT Command or Input) for actual Status of Fan.

Comment [RJS8]: Has the possibility been explored of contingencies (Installation of more supply openings, etc.) in case the current installation is incapable of rendering the correct Bunker DP in each mode?

Comment [RJS9]: RSA is completely conversant with the system and a small discussion with them would be sufficient for them to understand the intent and probably to assist in the efficient and accurate performance and procurement of the designer's intent.

Desired room pressures, pressure direction and limits in each SOO Mode would be sufficient direction. RSA & Siemens could take the system, configure them in each "matrix" mode and close/open dampers, speed up/slow down fans until the desired condition in that mode was determined. They could then document the airflow to ensure it is acceptable, document the system and component configuration in this mode and move to the next mode…

When the system is re-programmed to operate automatically without any manual intervention, the Fab is ready to test. When the automatic test succeeds, the system is ready to be witnessed.

Comment [RJS10]: I believe the objective is to operate EF-1&2 to maintain Exhaust Ventilation while AHU controls Fab DP and EF-3&4 controls Gas Cabinet Ventilation and Bunker DP. If the "3 (or more) fixed VFD" speed strategy can be utilized within the SOO Modes, the stated SOO is adequate. If Fixed VFD Speeds cannot accomplish these intents (See comment 11) during the multiple SOO Modes, consideration may need to be given to revising the control strategy within the Siemens controller. This might be accomplished by a "Selector" device / program of some sort. The General Exhaust Duct Static Pressure and the Fab DP would the Selector's inputs, the output would be to the VFD controlling EF-1&2.

The input from the Fab DP would be "OFF" whenever both AHU's were available, leaving the duct static in control of the EF-1 & 2 VFD speed. When an AHU failed, the Selector would change the input to the Fab DP, now controlling the EF-1&2 VFD speed to maintain Fab pressure.

... [1]

A Picture's Worth a Thousand Words

(And also Thousands of Dollars)

Description	Make-up Air (CFM)		Lab Exhaust (CFM)		Enter Ambient Air Intake Damper Status (CFM)	Gas Vault Exhaust (CFM)		Recirc Air Handlers	Recirc Air Handlers	Net Lab Pressure (Total Inlet - (Exhaust + Damper)		
	AHU-1A	AHU-1B	EF-1	EF-2		EF-3	EF-4					
	LSM	LS	LSM	LS				LSM	LS			
Equipment Capacity (CFM)	48,000	48,000	40,000	40,000		AUTO	AUTO					
Normal Operations	43,918	43,918	-38,108	-38,108	0	-2828	-2828	ON	ON	4992	+	
Normal EF-1 Fail/Service	33,398	38,398	0	-40,000	0	-2828	-2828	ON	ON	4990	+	
Normal EF-2 Fail/Service	33,398	38,398	-40,000	0	0	-2828	-2828	ON	ON	4990	+	
Normal EF-1 & 2 Both Fail	0	0	0	0	0	-2828	-2828	ON	ON	-8980	+	Shut down AHU-1A & 1B if EF-1 & 2 "fail", "Close" Emergency Intake Dampers. EF-3 & 4 remain "on". Evacuate labs diabled due to HazMat Safety Condition.
Normal AHU-1A Fail/Service	0	48,000	-38108	-38108	41,000	-2828	-2828	ON	ON	8992	+	
Normal AHU-1B Fail/Service	48,000	0	-38108	-38108	41,000	-2828	-2828	ON	ON	8992	+	
Normal AHU-1A&1B Both Fail	0	0	-38108	0	41,000	-2828	-2828	ON	ON	-2969	+	Shut down EF-2. "Open" Emergency Intake Dampers(+41,000 cfm). Labs will go slightly negative. EF-3 & 4 remain "on". Evacuate labs
Toxic Gas	43,918	43,918	-48,000	-48,000	52000	-2828	-2828	OFF	OFF	-4920	-	Toxic gas will initiate the following sequence of events:1) activate HazMat alarm audible and visual signal 2) annunciate at the fie alarm control panel, 3) transmit a signal to the UC Campus Police, 4) release automatic door holders, 5) recall elevators, 6) activate full "on" condition in dimming systems, 7) shutdown recirculation air handlers RAHU-1 thru 28 and 8) shutdown toxic gas systems.
Toxic Gas EF-1 Fails	28,878	28,878	0	-40,000	0	-2828	-2828	OFF	OFF	-8900	-	Close both the Emergency Intake dampers. Activate all toxic gas sequences indicated above
Toxic Gas EF-2 Fails	28,878	28,878	-40,000	0	0	-2828	-2828	OFF	OFF	-8900	-	Close both the Emergency Intake dampers. Activate all toxic gas sequences indicated above
Toxic Gas Both EF-1 & 2 Fail	0	0	0	0	0	-2828	-2828	OFF	OFF	-8980	-	Shutdown AHU-1A & 1B if EF-1 & 2 "fail", "Close" the Emergency Intake Dampers. Activate all toxic gas sequence of events indicated above. Close both Emergency Intake dampers. EF-3 & 4 remain "on". Evacuate labs diabled due to HazMat Safety Condition
Toxic Gas AHU-1A Fails	0	48,000	-38108	-38108	52000	-2828	-2828	OFF	OFF	-2058	-	Close the smaller emergency intake damper Activate all toxic gas sequences indicated above
Toxic Gas AHU-1B Fails	48,000	0	-38108	-38108	52000	-2828	-2828	OFF	OFF	-2058	-	Close the smaller emergency intake damper Activate all toxic gas sequences indicated above
Toxic Gas AHU-1A & 1B Fail Alarm Activation from Toxic Gas Monitoring	0	0	-38108	0	41,000	-2828	-2828	OFF	OFF	-2969	-	If both AHU-1A & 1B shutdown EF-2. Labs will go slightly negative, all fab fire/smoke dampers close. Open both emergency intake dampers. EF-3 & 4 remain "on". Activate all toxic gas sequences indicated above. Evacuate labs diabled due to HazMat Safety Condition.

wsb Page 1 8/8/2007

Description	Make-up Air (CFM)		Lab Exhaust (CFM)		Enter Ambient Air Intake Damper Status (CFM)	Gas Vault Exhaust (CFM)		Recirc Air Handlers	Recirc Air Handlers	Net Lab Pressure (Total Inlet - (Exhaust + Damper)		
	AHU-1A	AHU-1B	EF-1	EF-2		EF-3	EF-4					
	LSM	LS	LSM	LS				LSM	LS			
Power Out Emergency Gen On	48000	0	-38,108	0	0	-2828	-2828	OFF	OFF	4371	+	Fire Smoke dampers will "close" and then "open" on a loss in power. Provide a delay in the control scheme so that sending a fire smoke damper "closure alarm" does not occur. RAHU units not on emergency power and will be "off"...
Activation Fire Alarm VESDA Alarm Level #2 VESDA Alarm Level#3 Sprinkler Water Flow	43,918	43,918	-48,000	-48,000	52,000	-2828	-2828	OFF	OFF	-4920	-	Labs go to a negative pressure condition.
Activation of Emergency Ventilation Switch /Hazmat Alarm	43,918	43,918	-48,000	-48,000	52000	-2828	-2828	OFF	OFF	-4920	-	Emergency ventilation or Hazmat Alarm will initiate the following sequence of events:1) annunicate at the fie fie alarm control panel, 2) transmit a signal to the UC Campus Police, 3) shutdown recirculation air handlers RAHU-1 thru 28 and 4) shutdown toxic gas systems.
Air Handler AHU-1A Smoke Detector Activation	0	48,000	-38,108	-38,108	41000	-2828	-2828	OFF	ON	8992	+	Air handler AHU-1A smoke detector alarm will shutdown AHU-1A and the sequence of events will be initiated:, (1) activate fire alarm audible and visual signal, (2) annunicate at the fire alarm control panel and at annunicators, (3) transmit a signal to the UC Campus Police, (4) release all magnetic door holders, (5) activate full "on" condition in dimming systems, (6) shutdown fab toxic gas systems.
Air Handler AHU-1B Smoke Detector Activation	48,000	0	-38,108	-38,108	41000	-2828	-2828	ON	OFF	8992	+	Air handler AHU-1B smoke detector alarm will shutdown AHU-1B and initiate the same sequence of events as indicated above
Air Handler AHU-1A & 1B Smoke Detector Activation	0	0	-38,108	0	41,000	-2828	-2828	OFF	OFF	-2969	-	All duct mounted fire/smoke dampers will "close" if both AHU-1A&1B shutdown.Also the same sequence of events as listed above with the exception that all recirculating air handlers will shutdown.
Normal Operations EF3 Out of Service	43,918	43,918	-38,108	-38,108	Closed	0	-6000	ON	ON	4,992	+	Chem/Gas Vault balanced to always be negative with respect to the Microfab. Microlab is slightly positive.
Normal Operations EF4 Out of Service	43,918	43,918	-38,108	-38,108	Closed	-6000	0	ON	ON	4,992	+	Chem/Gas Vault balanced to always be negative with respect to the Microfab. Microlab is slightly positive.
Normal Operations EF3 & 4 Out of Service	43,918	43,918	-38,108	-38,108	Closed	0	0	ON	ON	11,912	+	Labs remain positive with respect to Chem/Gas Vault. Evacuate labs diabled due to HazMat Saety Condition

wsb Page 2 8/8/2007

A Picture's Worth a Thousand Words

(And also Thousands of Dollars)

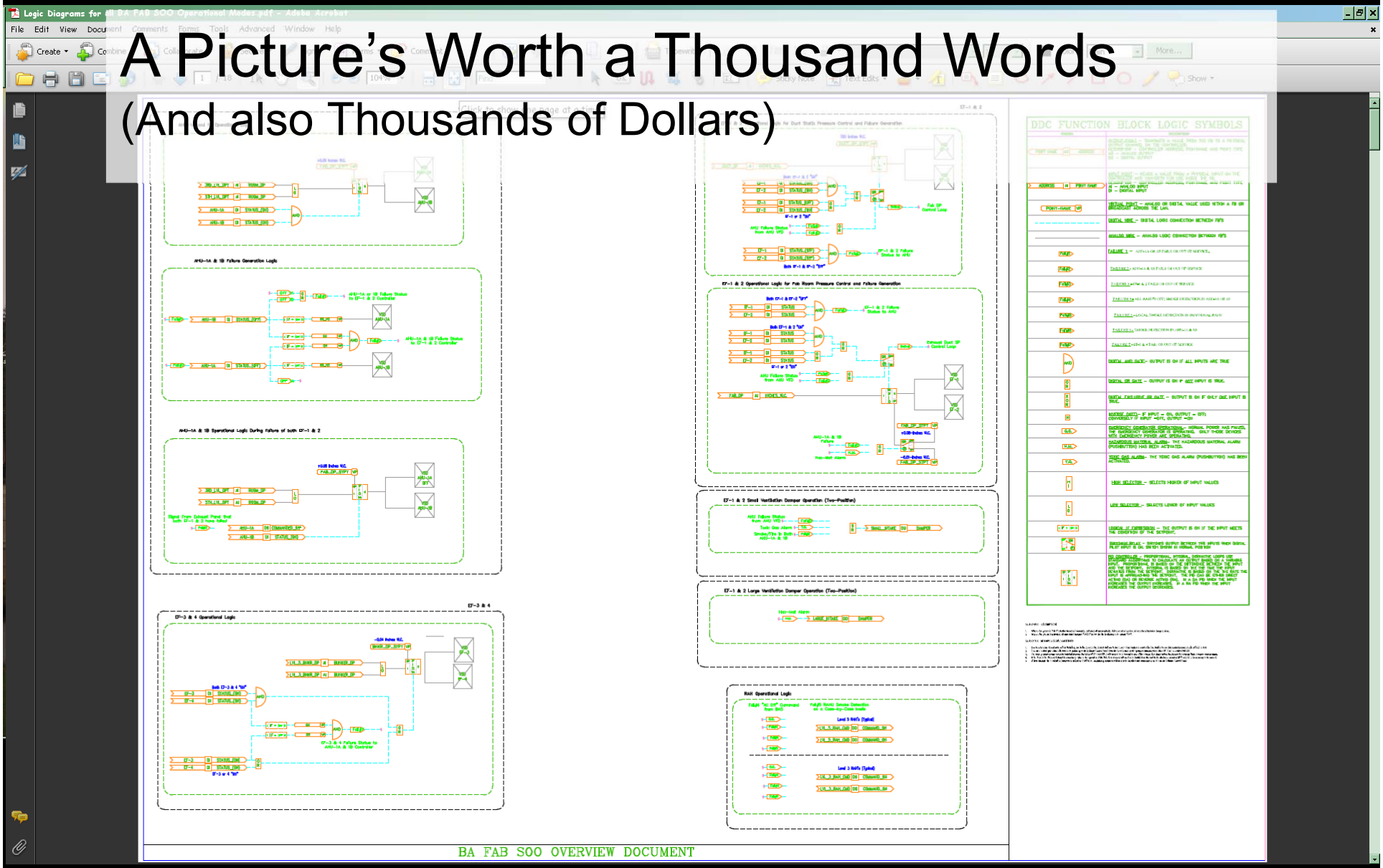

Boolean Algebra; The Fundamental Principle Behind Computer Logic

- Boolean algebra is the algebra of two values
  - 0 and 1
  - True and False
  - On and Off
- Computers are machines that "think" using two values
- Boolean algebra can represent how computers think
- "Truth tables" represent the result of Boolean operations

AND truth table and logic symbol

I_a	I_b	$O=I_a.I_b$
F	F	F
F	T	F
T	F	F
T	T	T

Possible Input States

Result

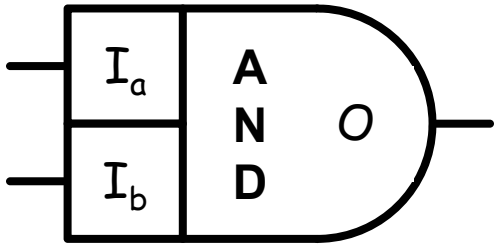

Boolean Algebra; The Fundamental Principle Behind Computer Logic

- Boolean algebra is the algebra of two values
  - 0 and 1
  - True and False
  - On and Off
- Computers are machines that "think" using two values
- Boolean algebra can represent how computers think
- "Truth tables" represent the result of Boolean operations

OR truth table and logic symbol

I_a	I_b	$O=I_a+I_b$
F	F	F
F	T	T
T	F	T
T	T	T

Possible Input States

Result

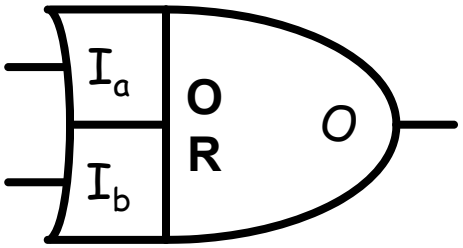

Boolean Algebra; The Fundamental Principle Behind Computer Logic

- Boolean algebra is the algebra of two values
  - 0 and 1
  - True and False
  - On and Off
- Computers are machines that "think" using two values
- Boolean algebra can represent how computers think
- "Truth tables" represent the result of Boolean operations

OR truth table and logic symbol

I_a	I_b	$O=I_a+I_b$
F	F	F
F	T	T
T	F	T
T	T	T

Possible Input States

Result

For more information on Boolean Logic see Chapter 2 of The Art of Assembly Language; http://homepage.mac.com/randyhyde/webster.cs.ucr.edu/www.artofasm.com/DOS/pdf/ch02.pdf

Relay Logic = A Form of Boolean Algebra

Open Contact = False; Closed Contact = True

Relay Logic **AND**

Both contacts have to be closed to get current from A to B

AND truth table

I_a	I_b	$O=I_a.I_b$
F	F	F
F	T	F
T	F	F
T	T	T

Relay Logic = A Form of Boolean Algebra

Open Contact = False; Closed Contact = True

Relay Logic **OR**

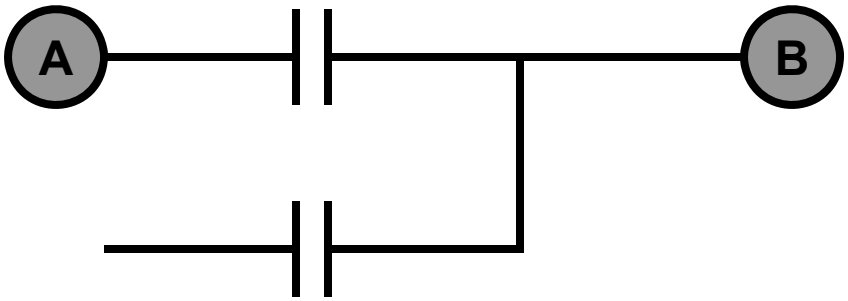

Either or both contacts being closed will get current from A to B

OR truth table

I_a	I_b	$O=I_a+I_b$
F	F	F
F	T	T
T	F	T
T	T	T

Controlling an Evaporator Pump with Relay Logic

JIC (Joint Industry Council) ladder diagram symbol list available from Womack Machine Supply Co. website at http://www.womackmachine.com/pdf/rb365/10p430-1.pdf

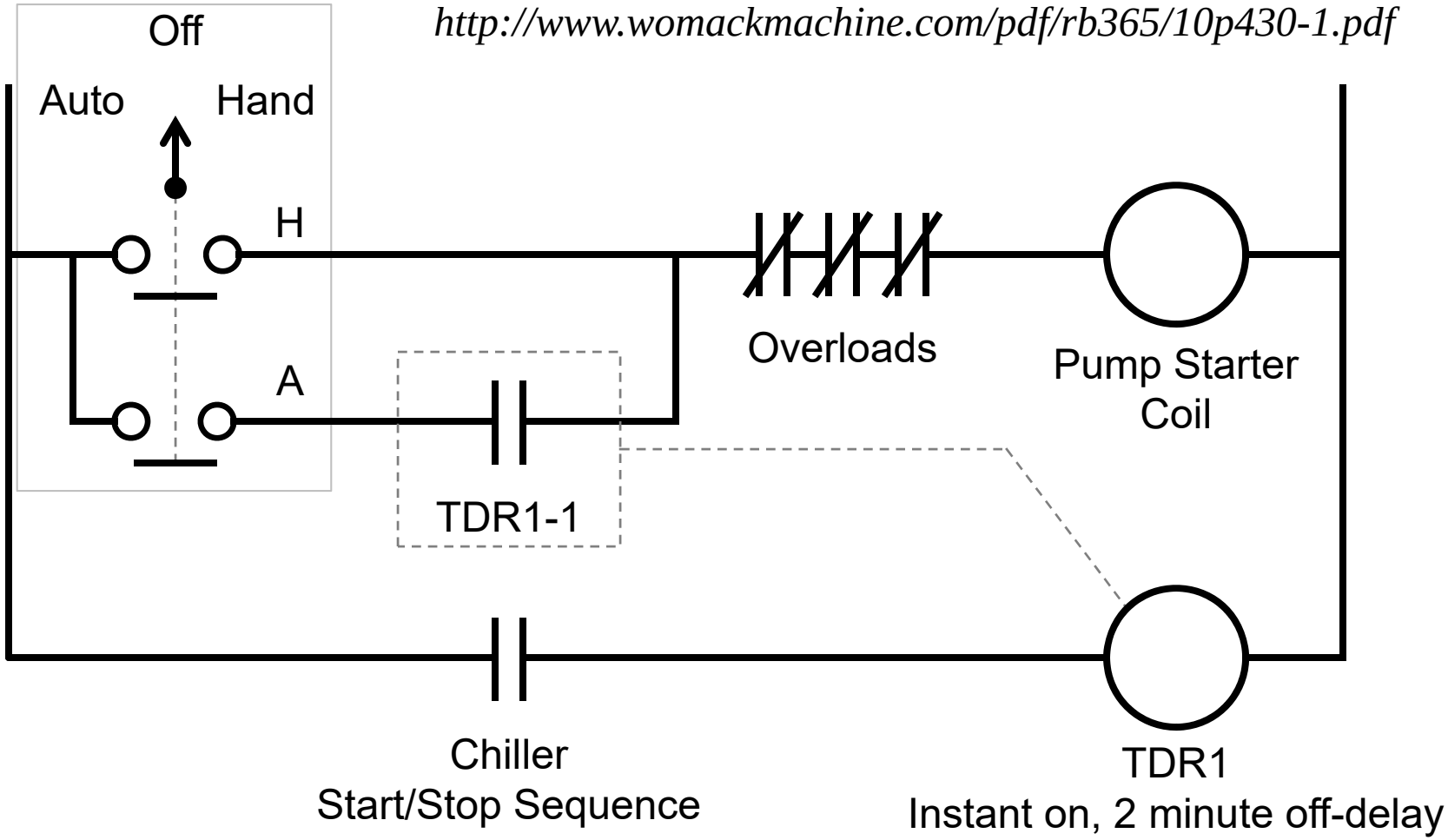

Controlling an Evaporator Pump with Relay Logic

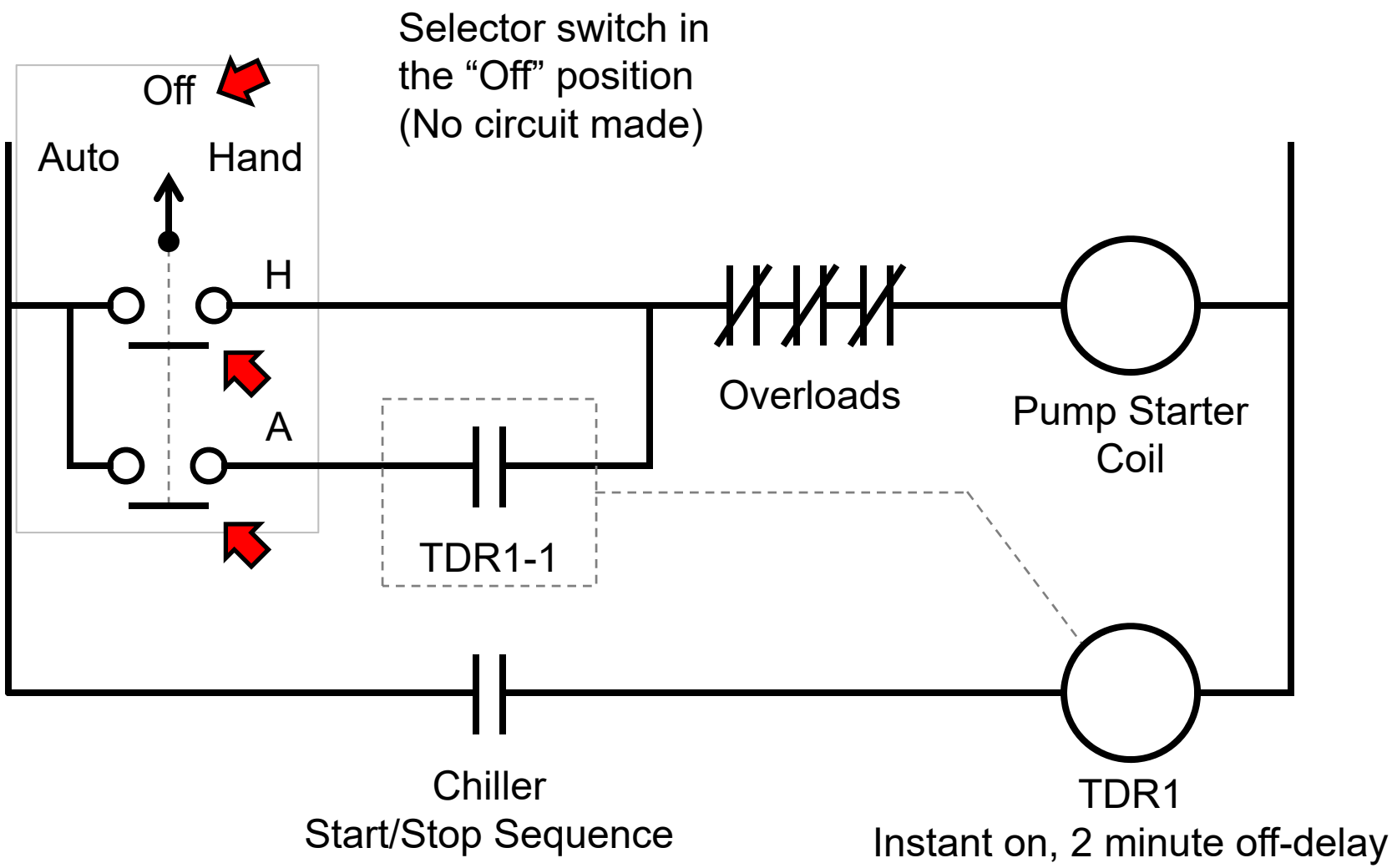

Controlling an Evaporator Pump with Relay Logic

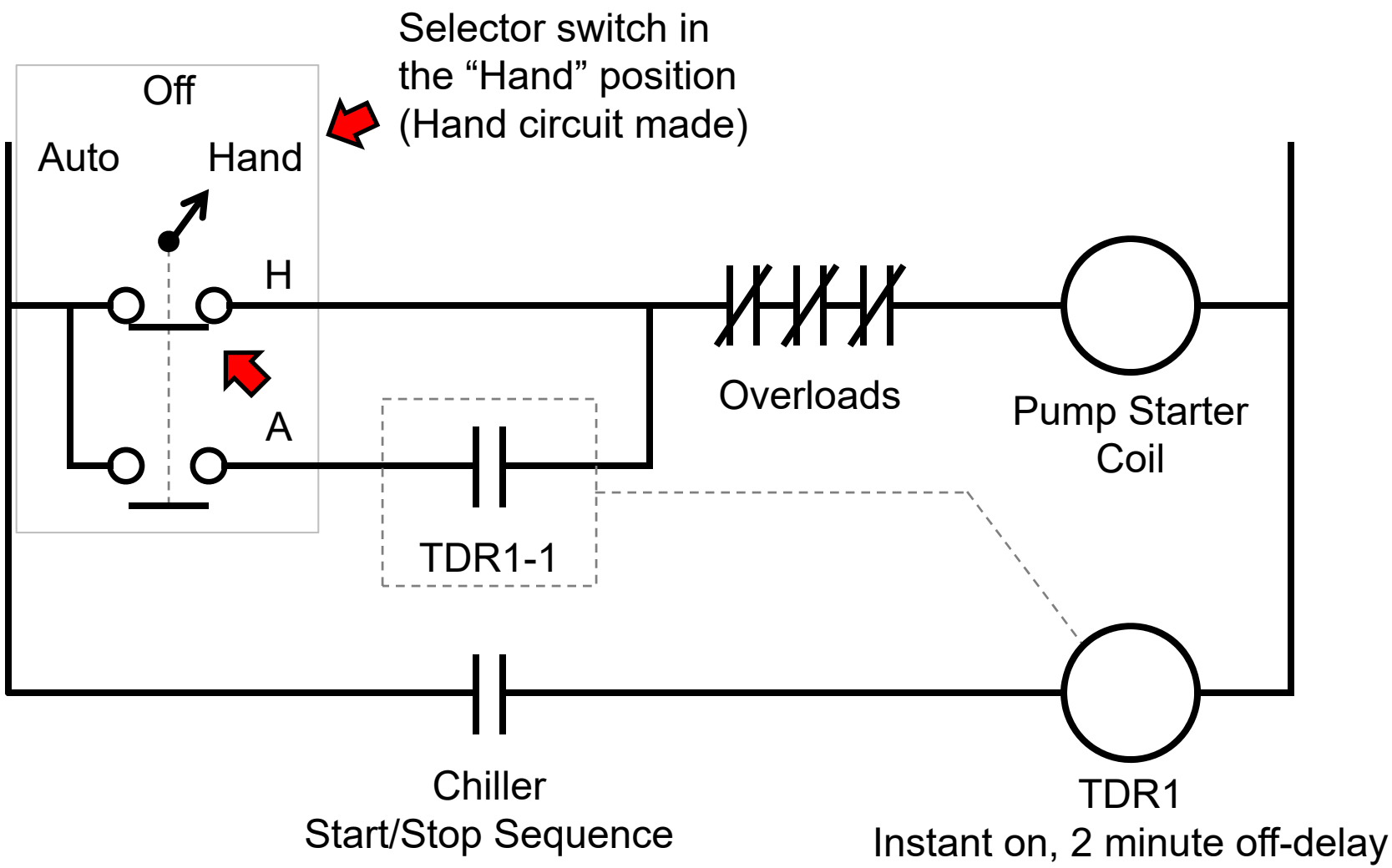

Controlling an Evaporator Pump with Relay Logic

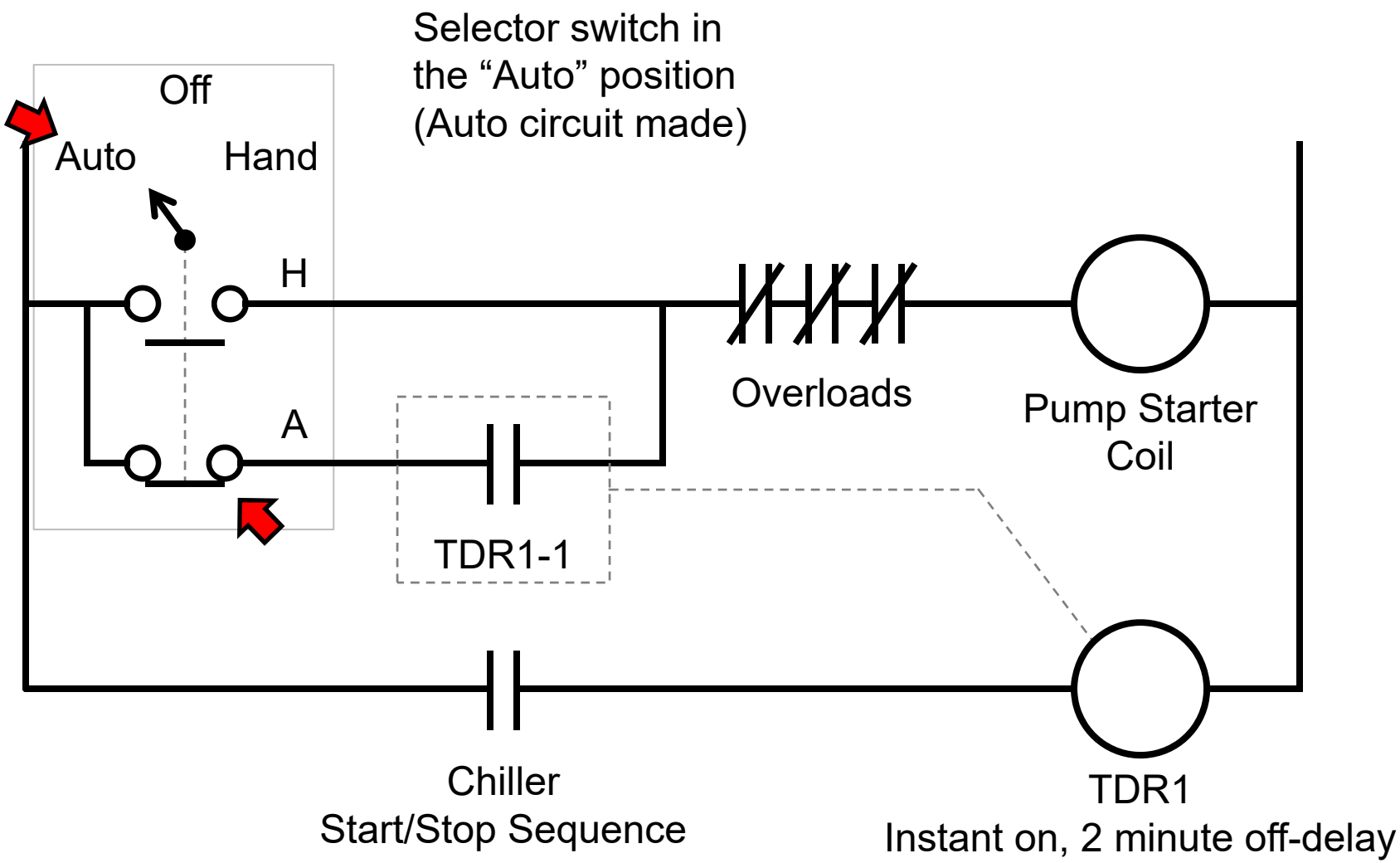

Controlling an Evaporator Pump with Relay Logic

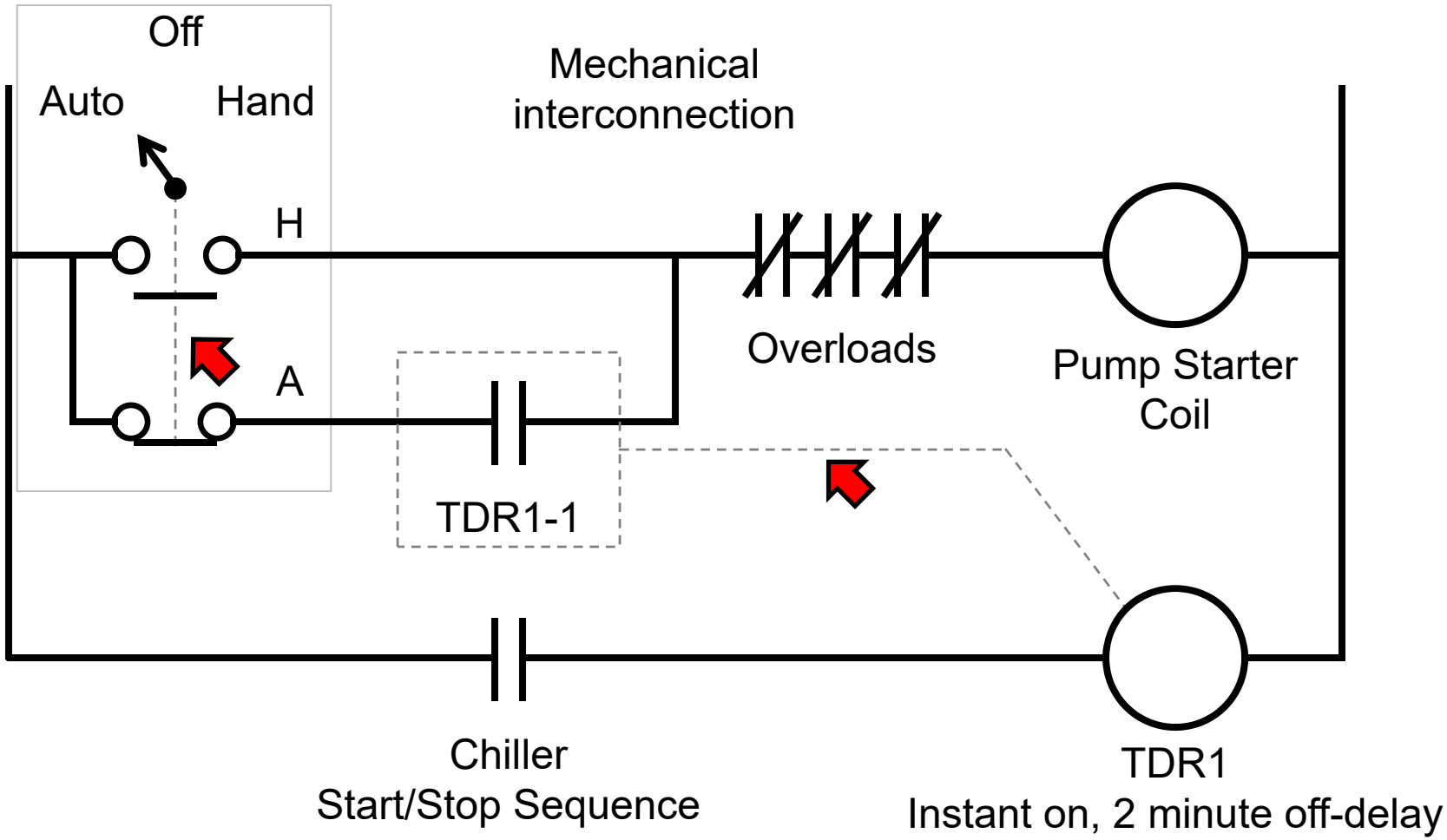

Controlling an Evaporator Pump with Relay Logic

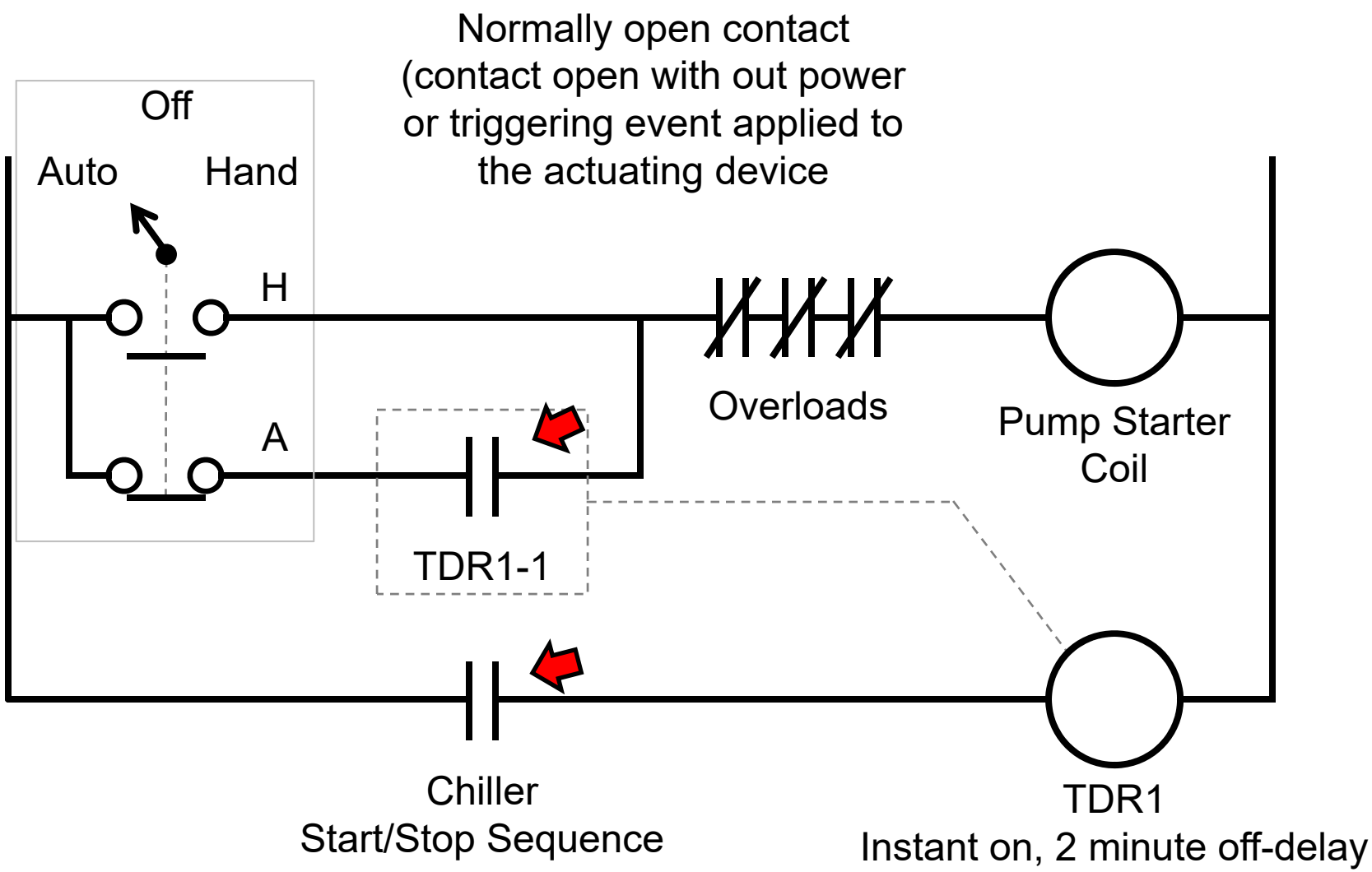

Controlling an Evaporator Pump with Relay Logic

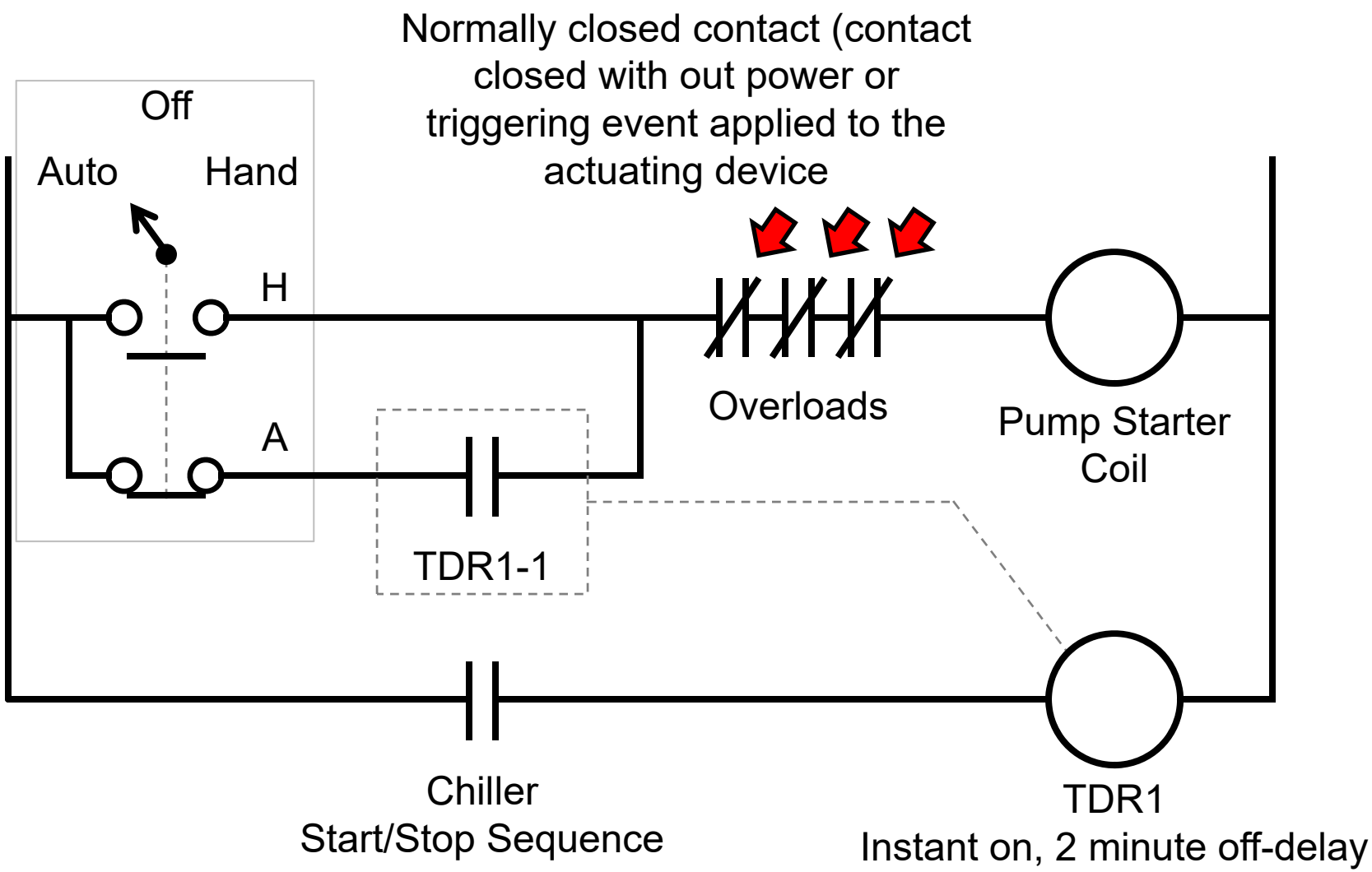

Controlling an Evaporator Pump with Relay Logic

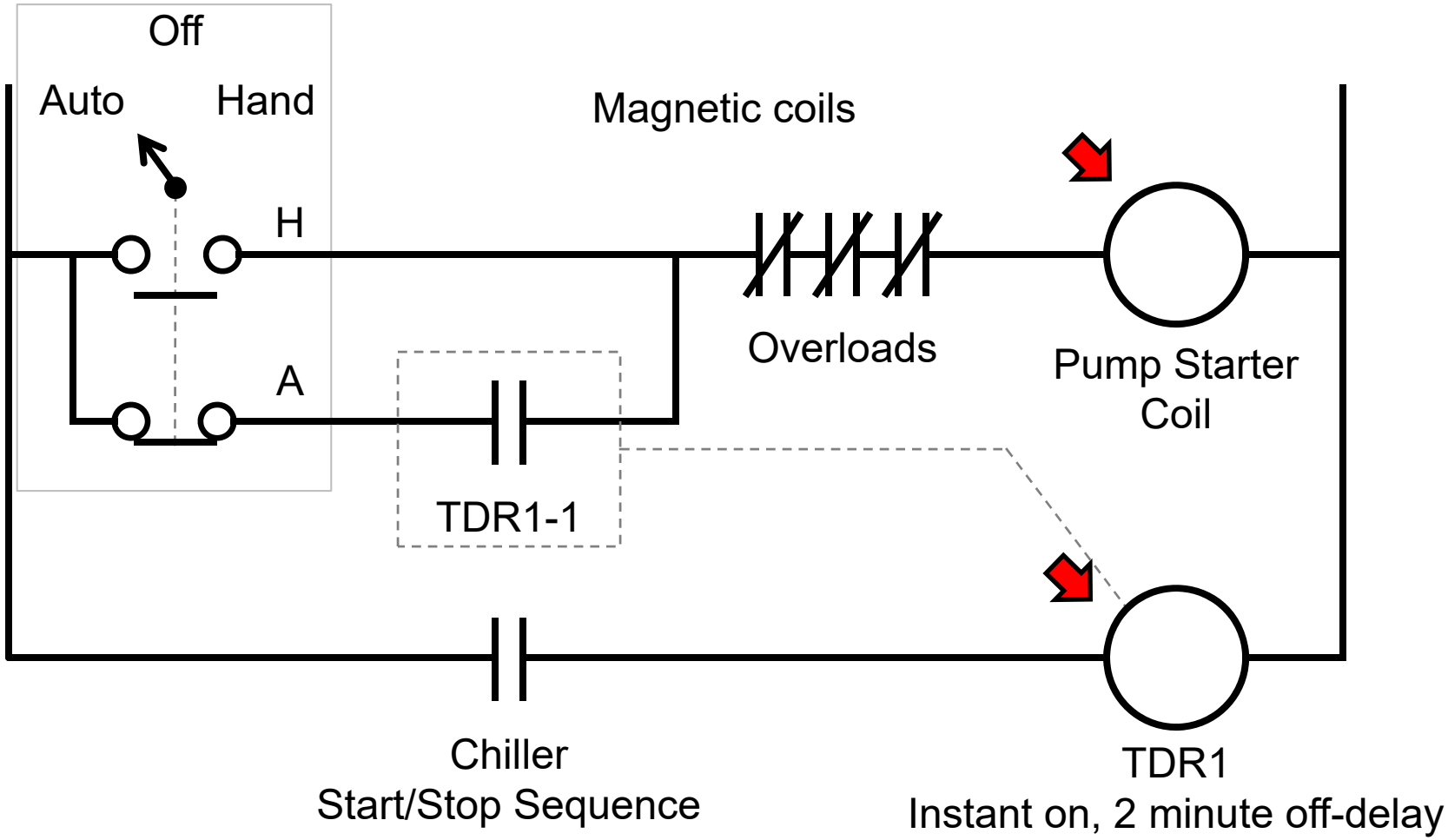

Controlling an Evaporator Pump with Relay Logic

Design Intent: In "Auto", start the pump when required by the chiller start sequence.

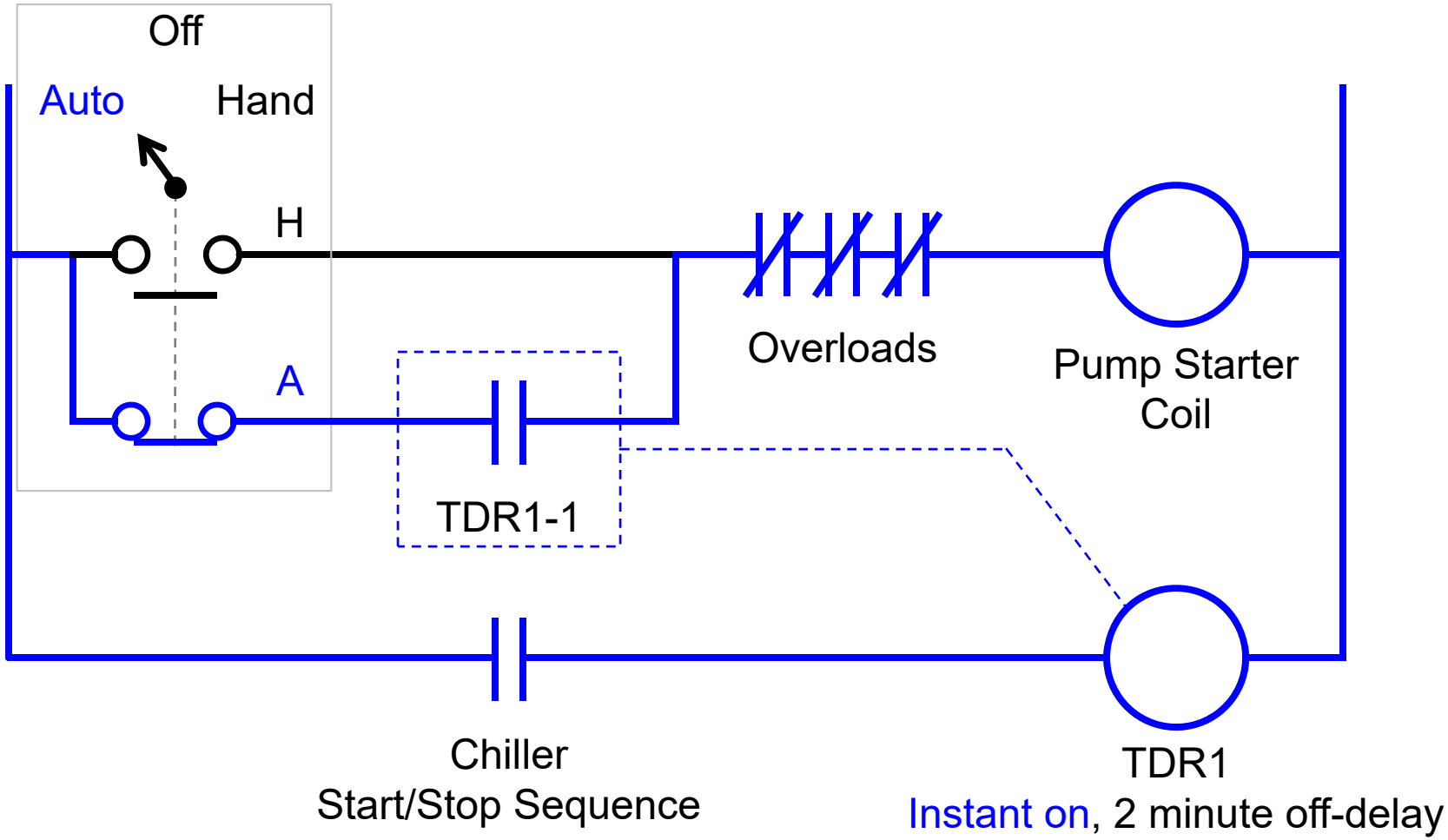

Controlling an Evaporator Pump with Relay Logic

Design Intent: In "Auto", start the pump when required by the chiller start sequence. Keep it running for 2 minutes after the chiller shuts down.

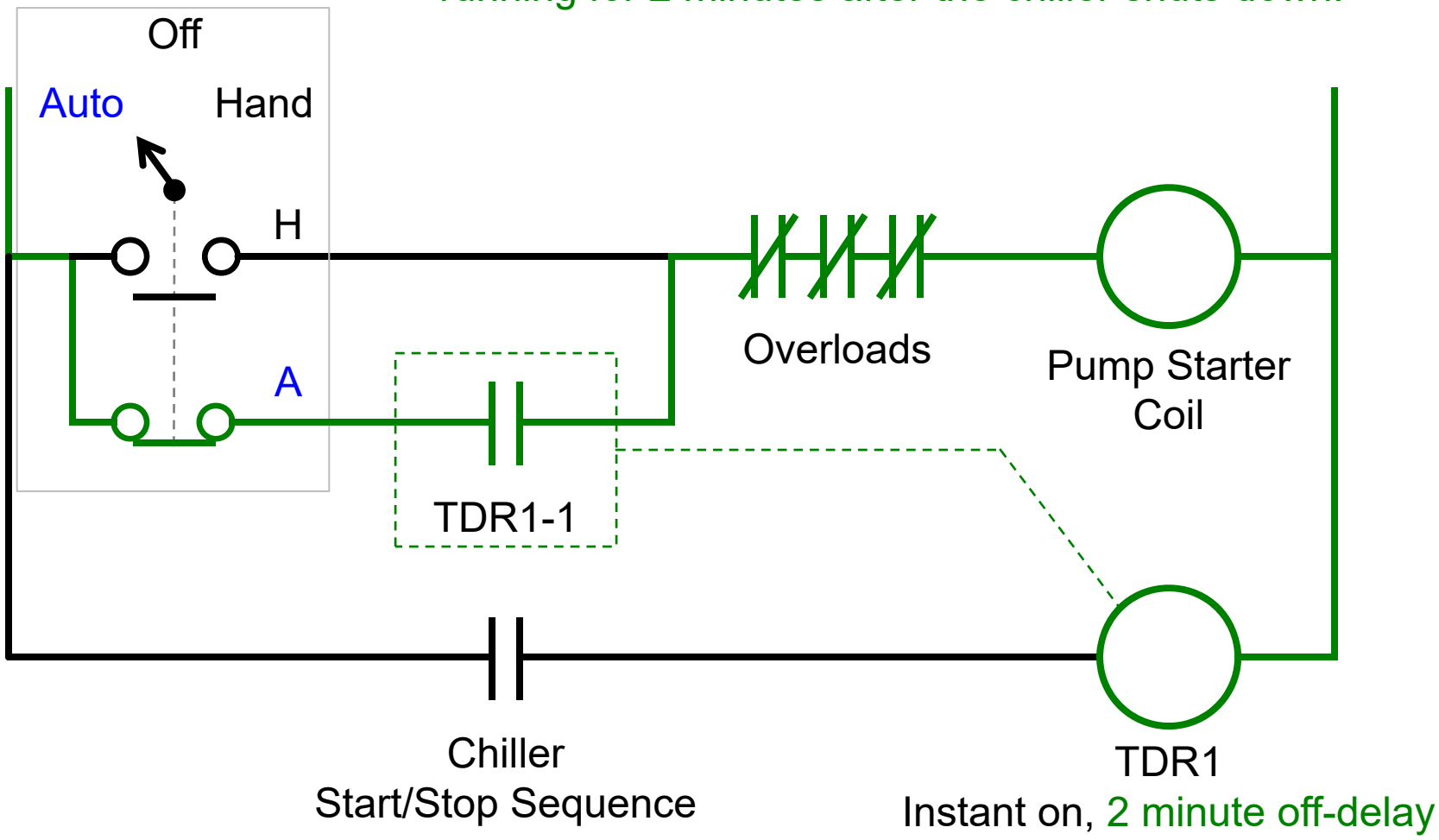

Controlling an Evaporator Pump with Relay Logic

Design Intent: In “Auto”, start the pump when required by the chiller start sequence. Keep it running for 2 minutes after the chiller shuts down.

Run the pump continuously in “Hand”.

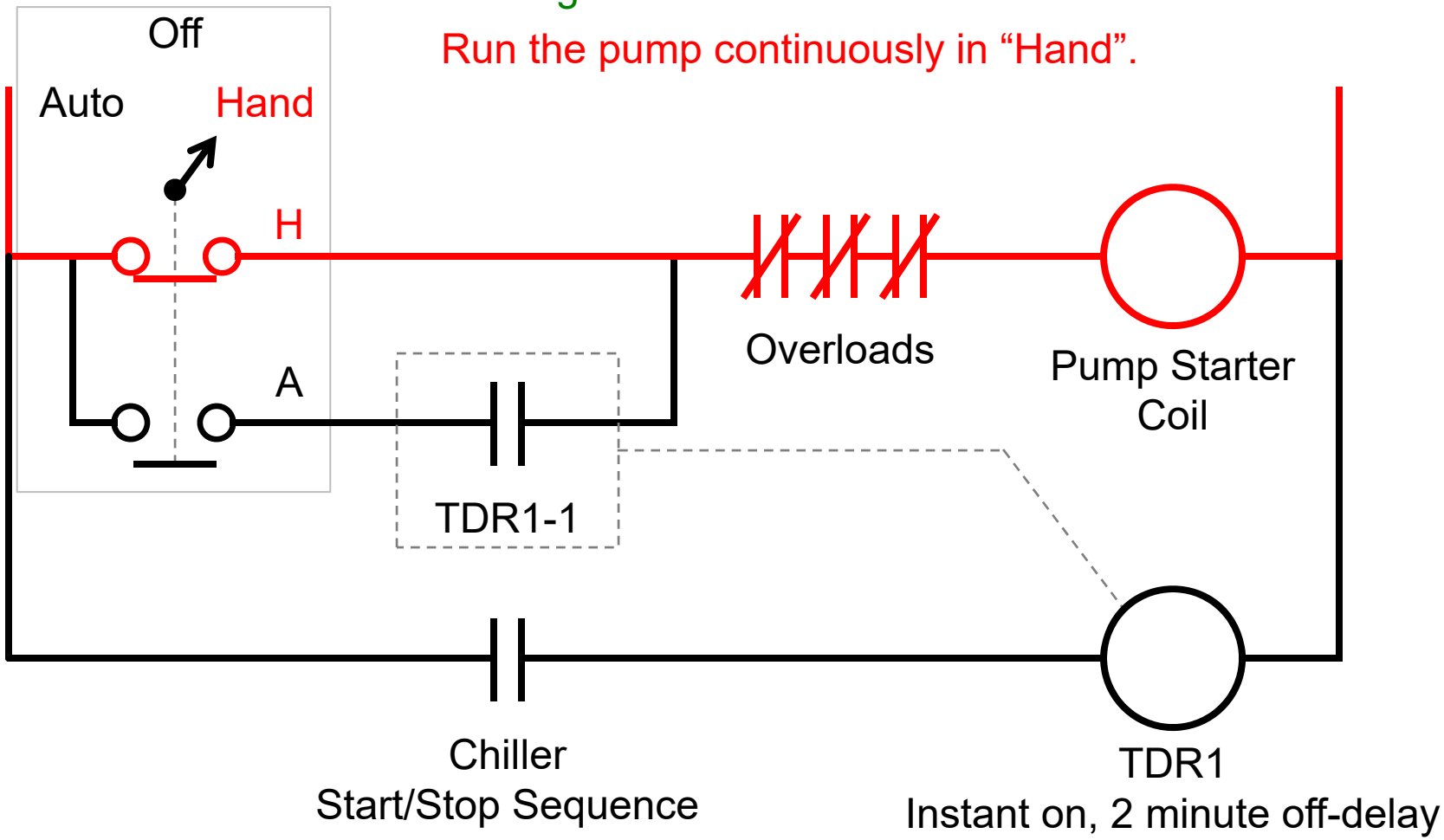

Controlling an Evaporator Pump with Relay Logic

Design Intent: In "Auto", start the pump when required by the chiller start sequence. Keep it running for 2 minutes after the chiller shuts down.

Run the pump continuously in "Hand".

Overloads shut down the pump no matter what.

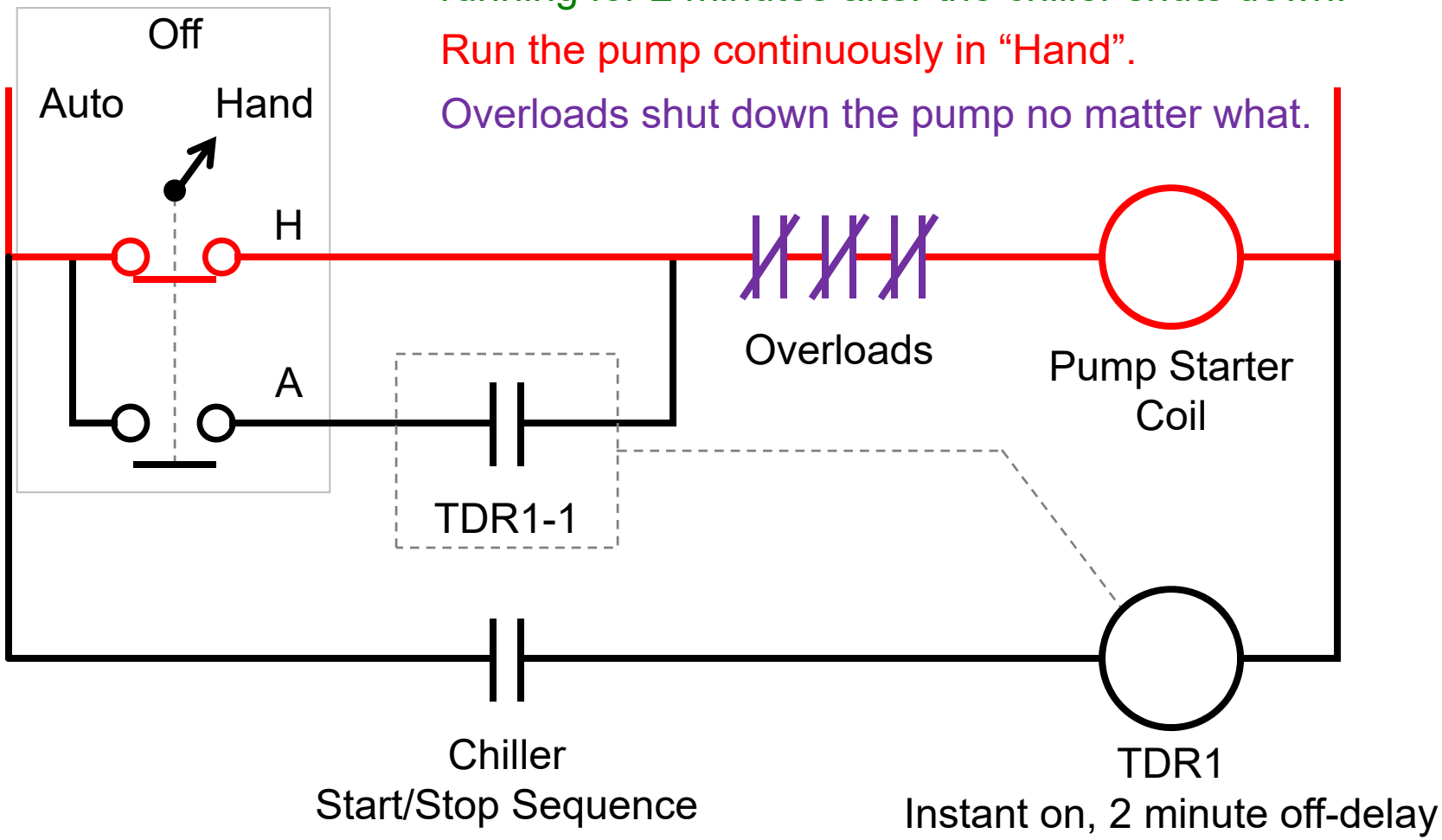

Programmable Logic Controllers (PLCs) Use Ladder Diagram Symbols to Write Programs

IDEC SmartRelay Program Controlling a Water Feature

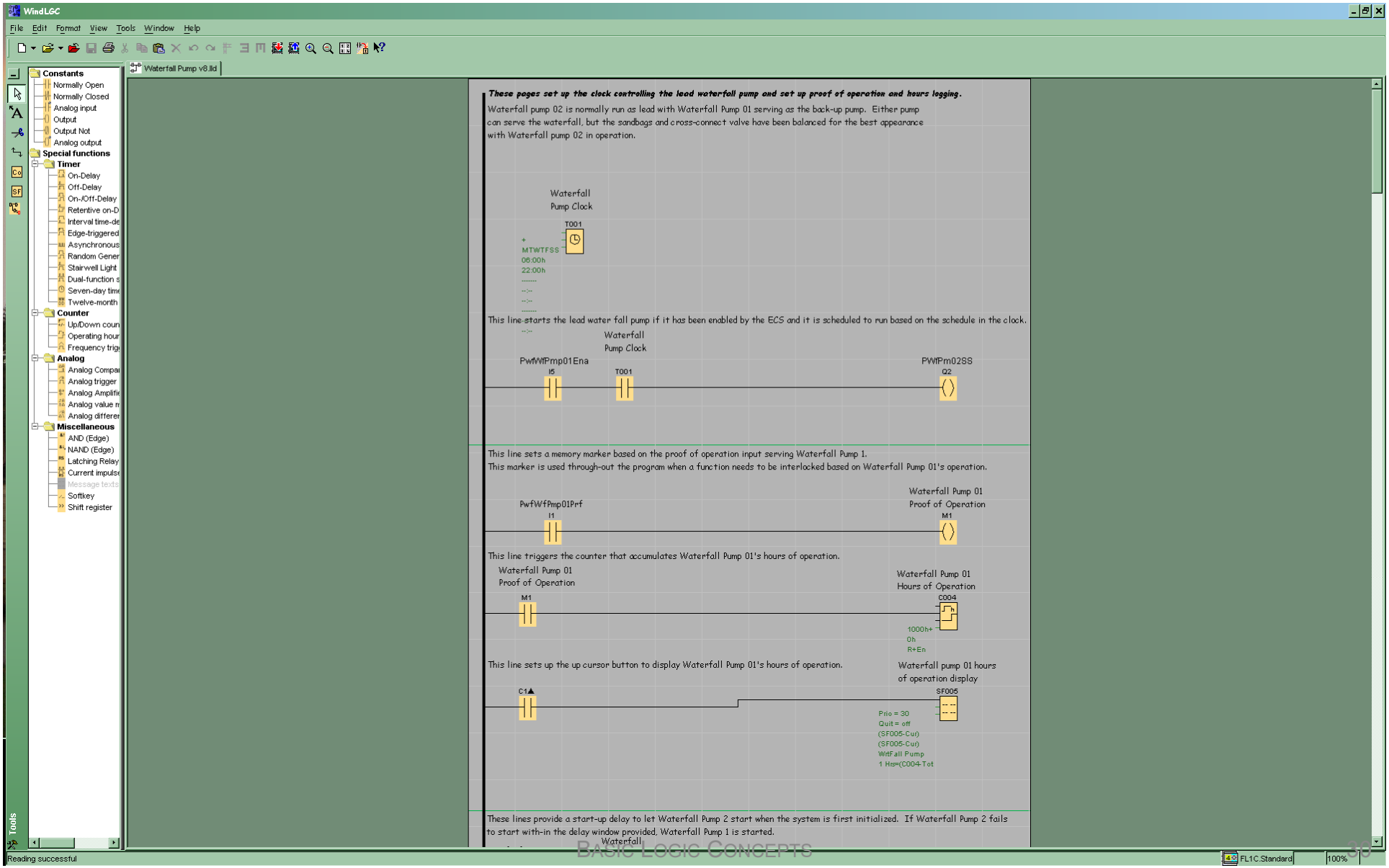

IDEC SmartRelay Program Controlling a Water Feature

Controlling an Evaporator Pump with Relay Logic

In current technology DDC systems, computer logic has taken over much of the automation and timing.

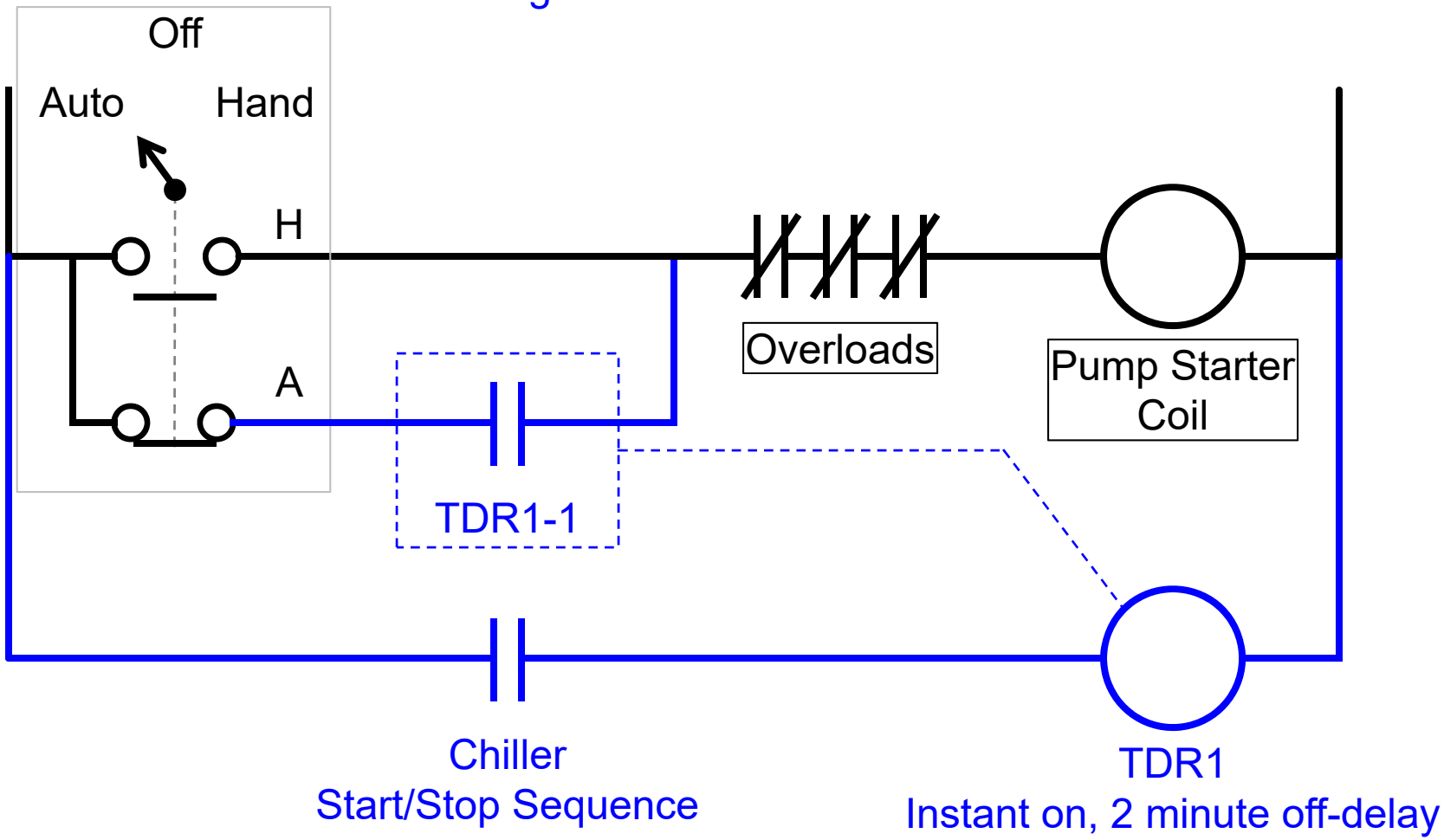

Controlling an Evaporator Pump with Relay Logic

In current technology DDC systems, computer logic has taken over much of the automation and timing.

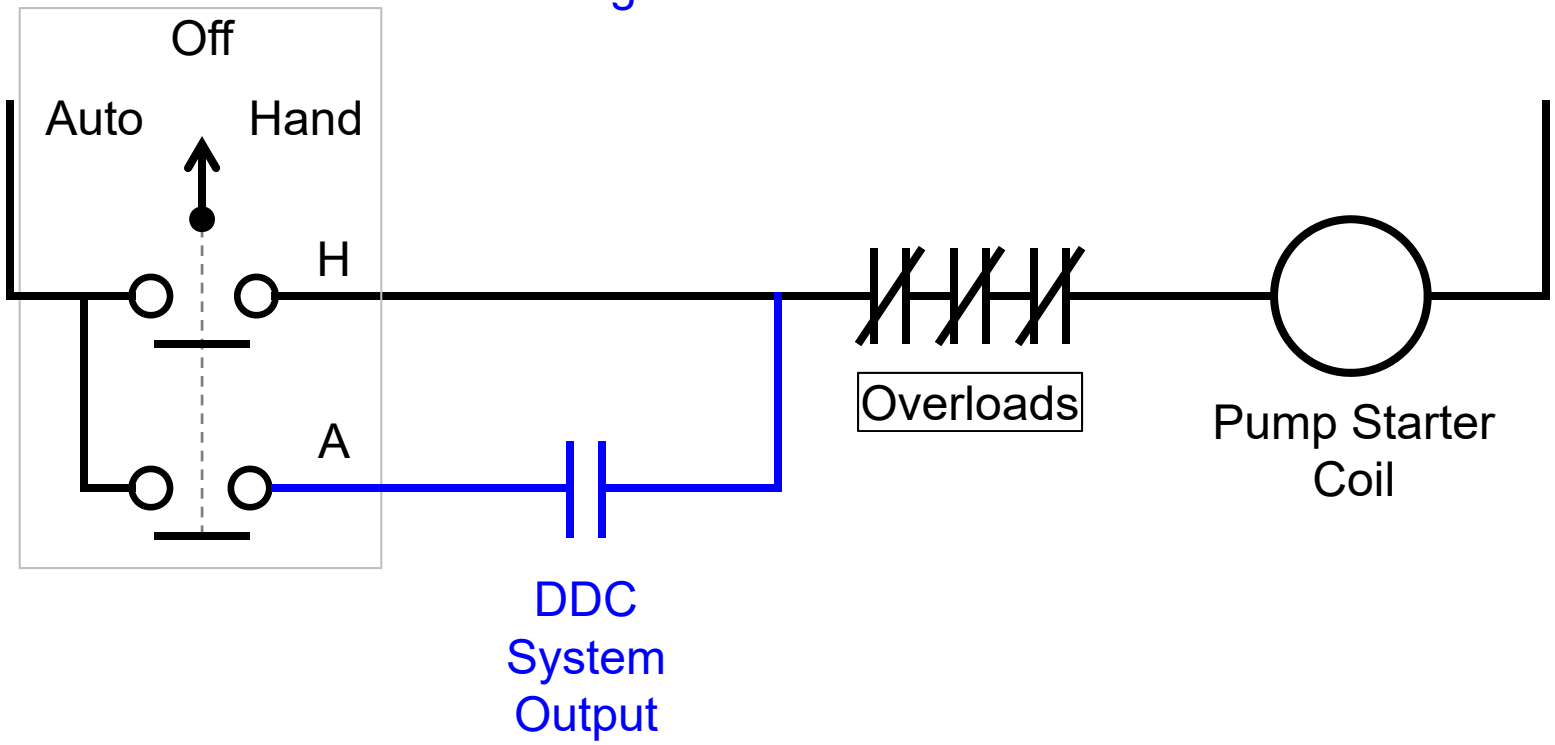

Controlling an Evaporator Pump with Relay Logic

In current technology DDC systems, computer logic has taken over much of the automation and timing.

Hardwired interlocks are still used to provide safety/fail safe functions.

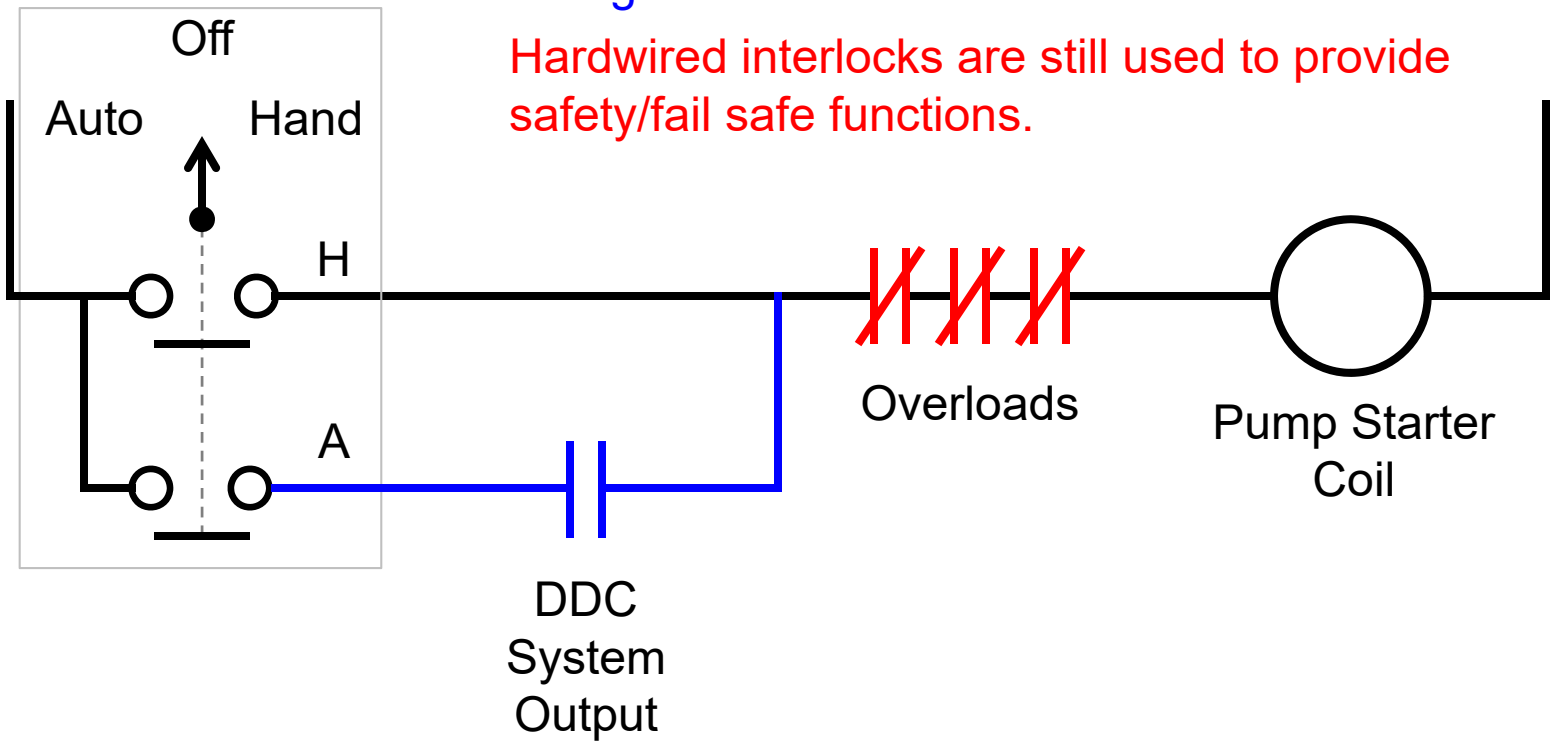

Flow Chart for DDC Logic to Controlling the Chilled Water Pump Automation

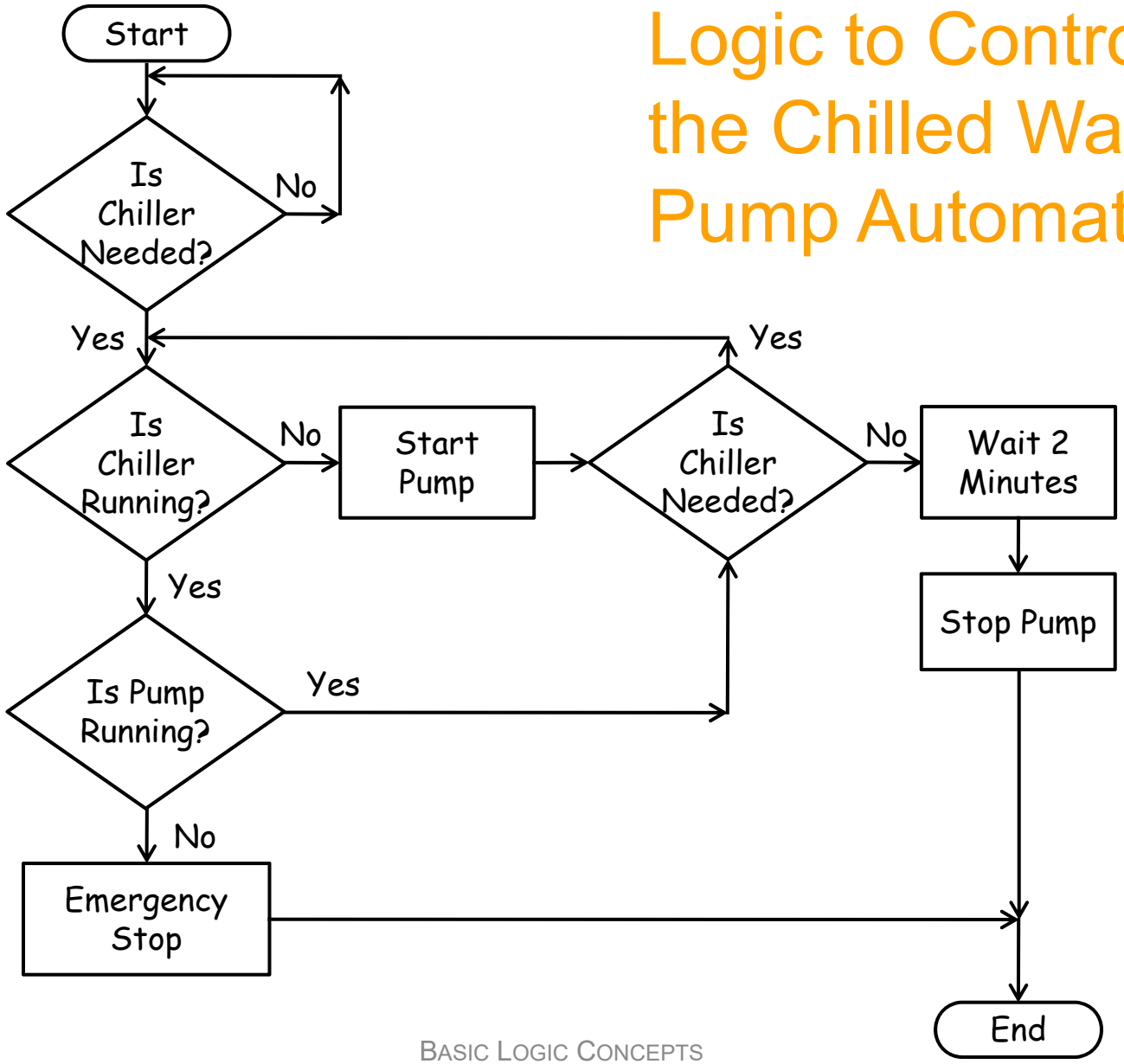

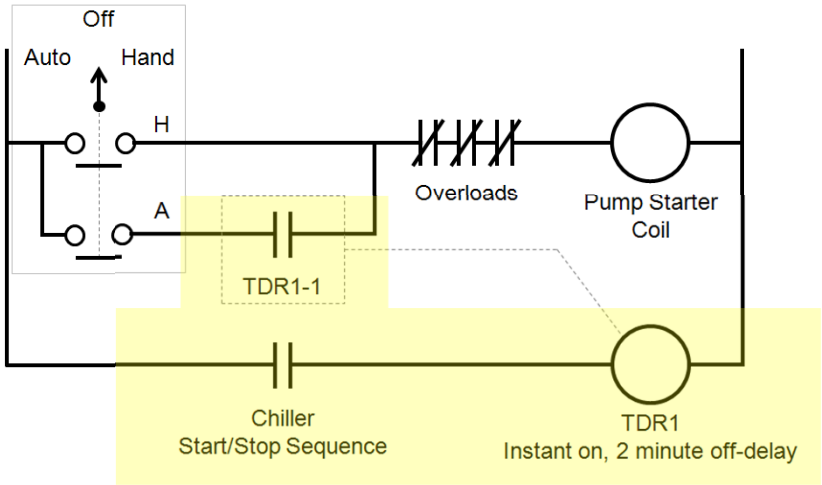
Off
Auto
Hand
H
A
Overloads
Pump Starter
Coil
TDR1-1
Chiller
Start/Stop Sequence
TDR1
Instant on, 2 minute off-delay

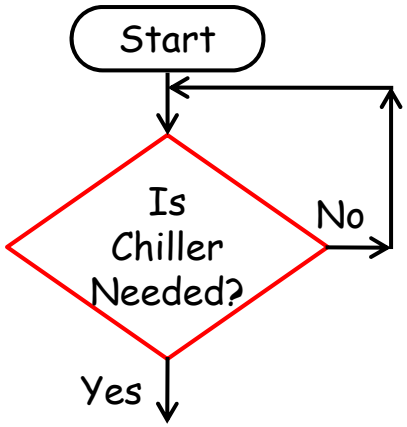
Start
Is Chiller Needed?
No
Yes

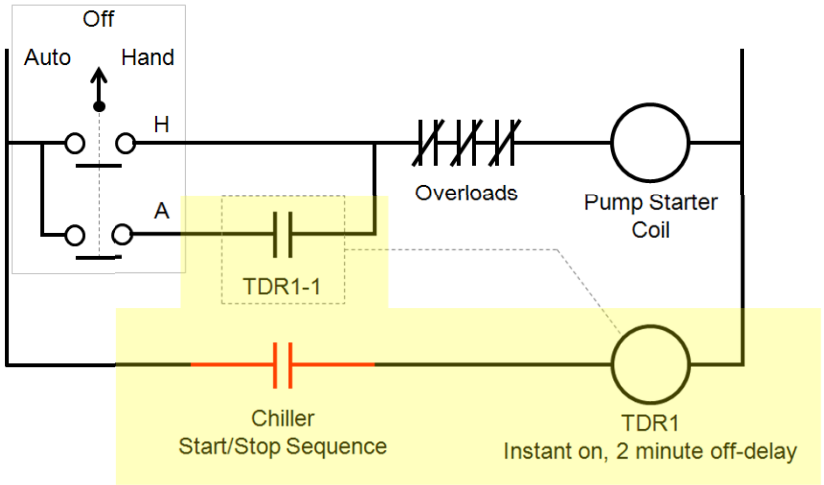
Off
Auto
Hand
H
A
Overloads
Pump Starter Coil
TDR1-1
Chiller Start/Stop Sequence
TDR1
Instant on, 2 minute off-delay

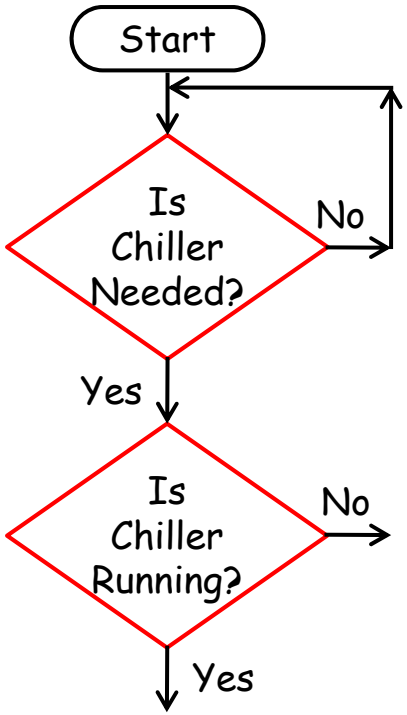
Start
Is Chiller Needed?
No
Yes
Is Chiller Running?
No
Yes

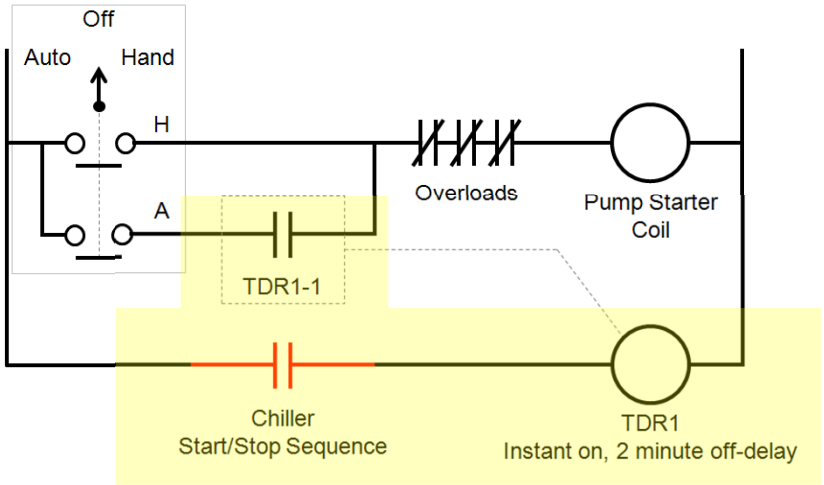
Off
Auto
Hand
H
A
Overloads
Pump Starter Coil
TDR1-1
Chiller Start/Stop Sequence
TDR1
Instant on, 2 minute off-delay

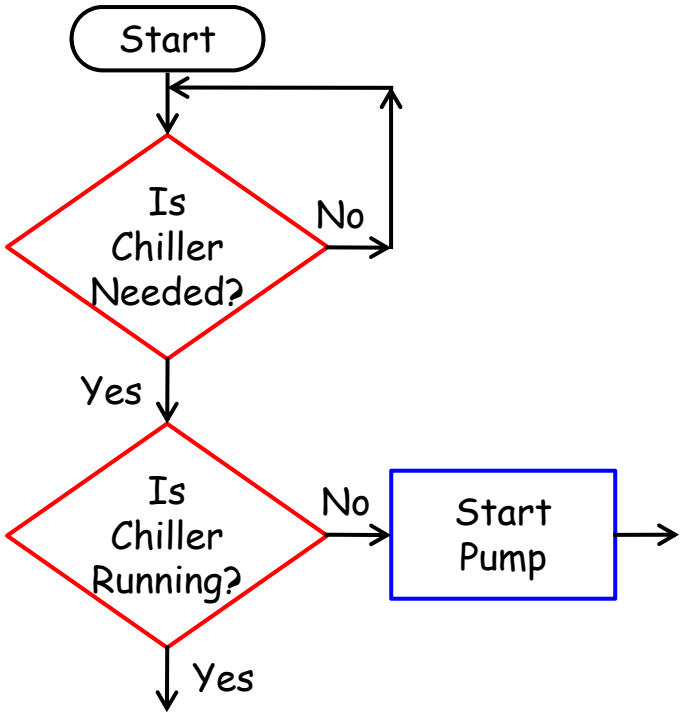
Start
Is Chiller Needed?
No
Yes
Is Chiller Running?
No
Start Pump
Yes

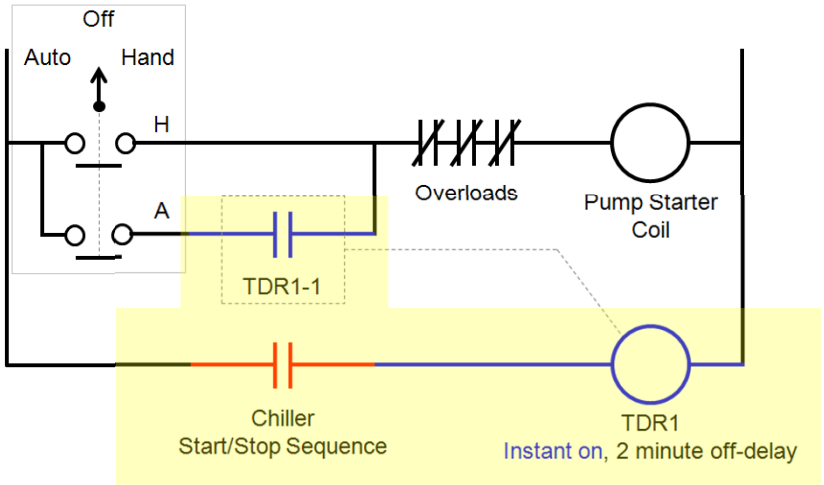
Off
Auto
Hand
H
A
Overloads
Pump Starter Coil
TDR1-1
Chiller Start/Stop Sequence
TDR1
Instant on, 2 minute off-delay

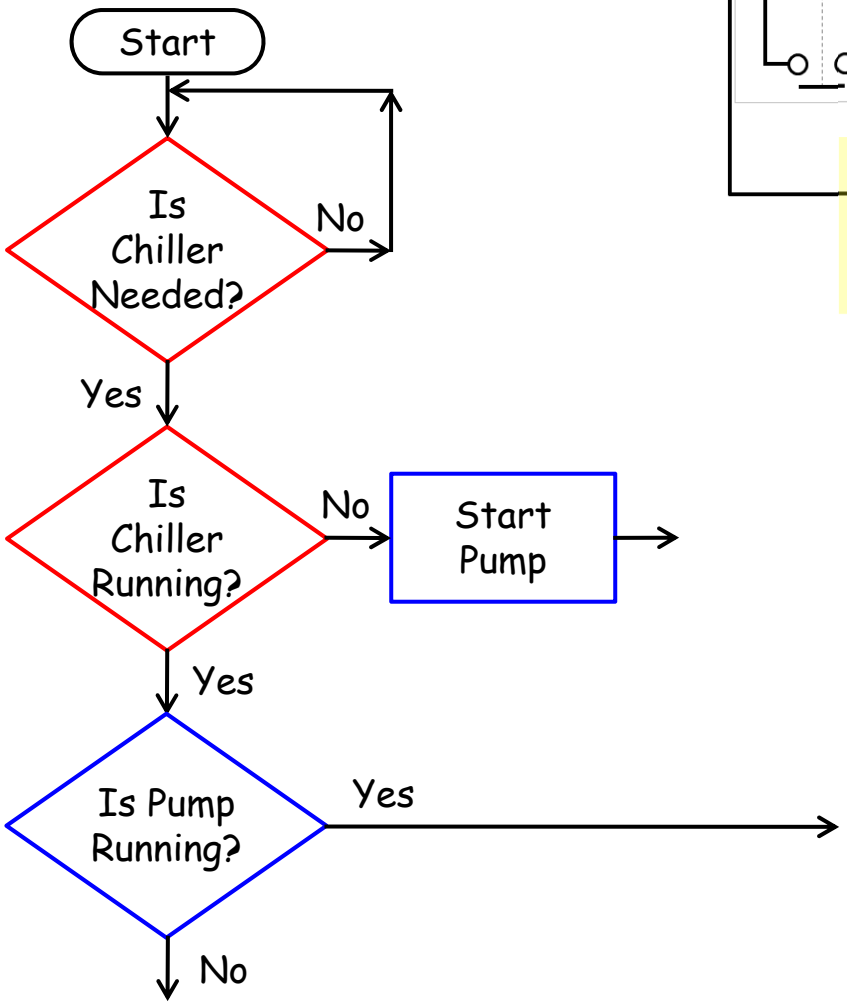
Start
Is Chiller Needed?
No
Yes
Is Chiller Running?
No
Start Pump
Yes
Is Pump Running?
Yes
No

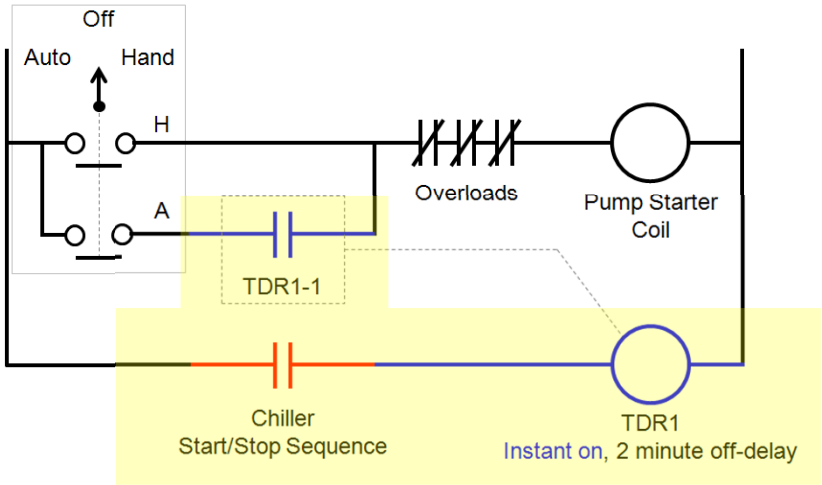
Off
Auto
Hand
H
A
Overloads
Pump Starter Coil
TDR1-1
Chiller Start/Stop Sequence
TDR1
Instant on, 2 minute off-delay

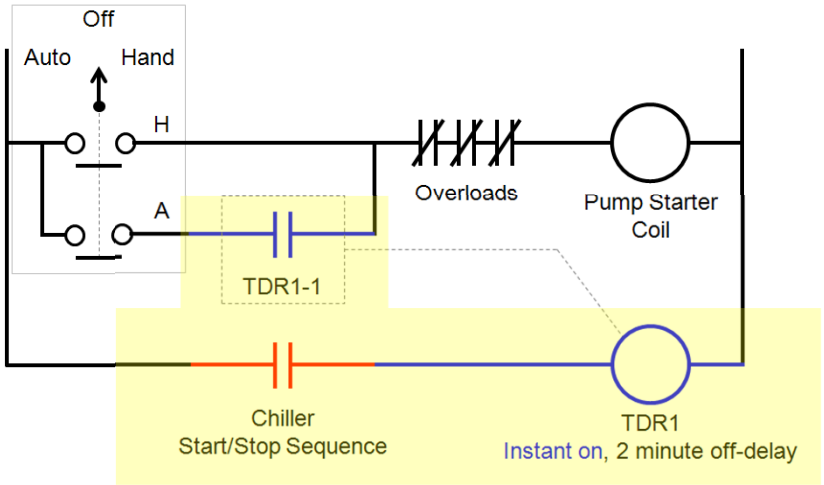
Off
Auto
Hand
H
A
Overloads
Pump Starter
Coil
TDR1-1
Chiller
Start/Stop Sequence
TDR1
Instant on, 2 minute off-delay

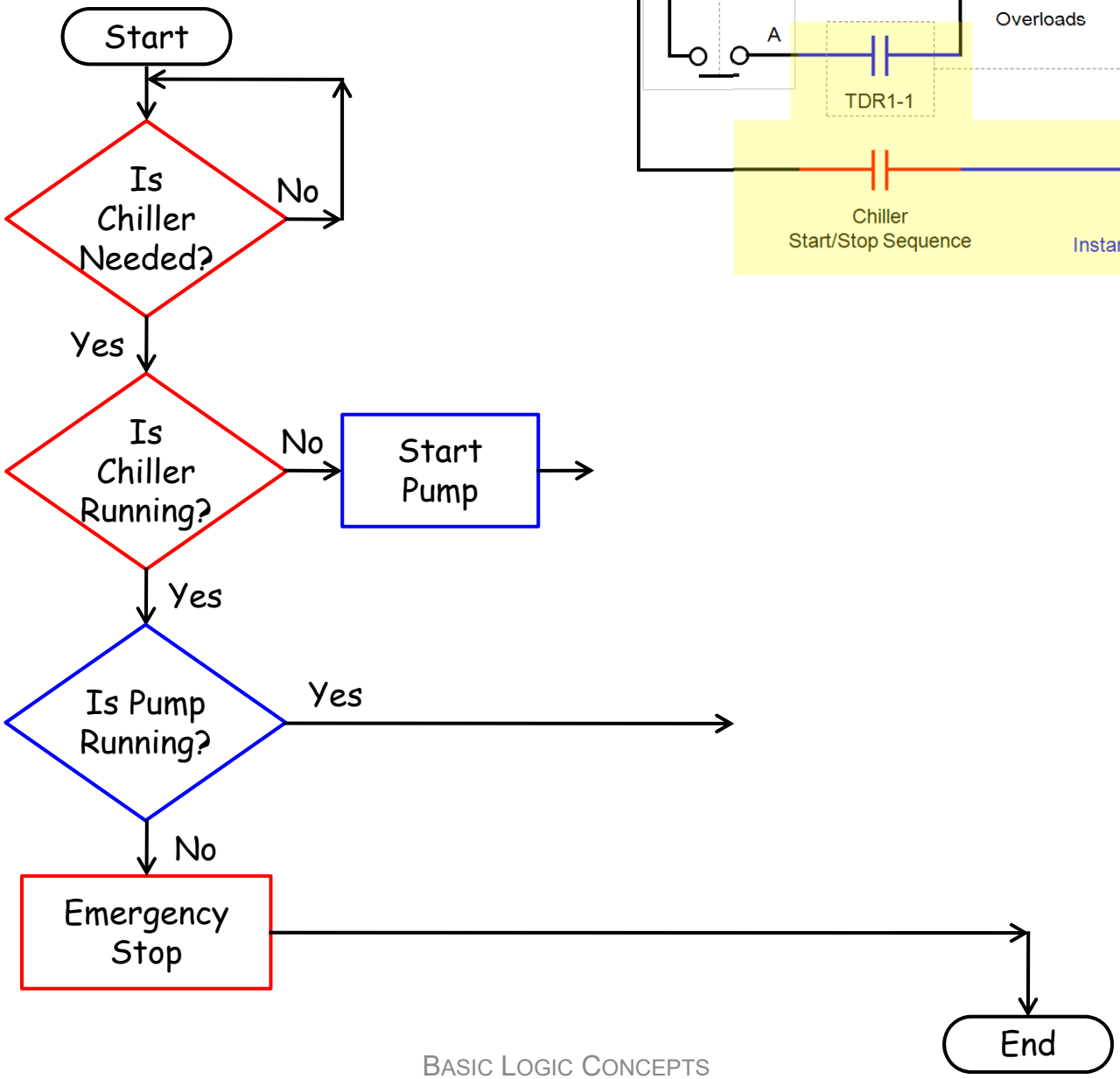
Start
Is
Chiller
Needed?
No
Yes
Is
Chiller
Running?
No
Start
Pump
Yes
Is Pump
Running?
Yes
No
Emergency
Stop
End

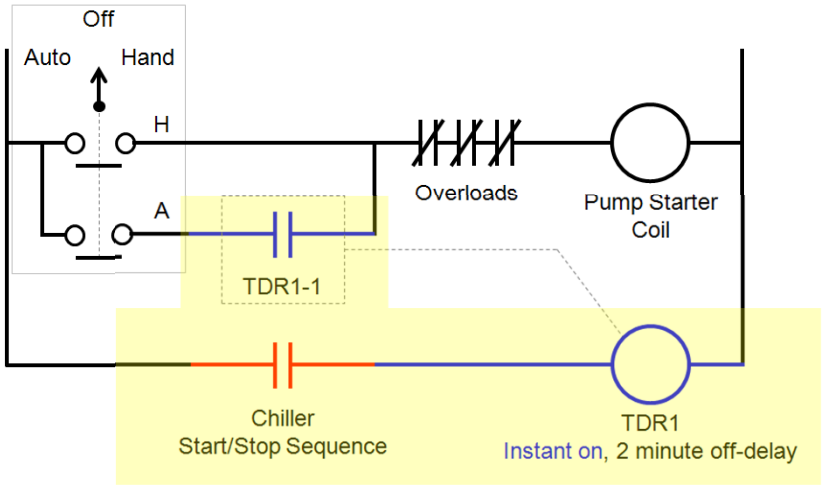
Off
Auto
Hand
H
A
Overloads
Pump Starter Coil
TDR1-1
Chiller Start/Stop Sequence
TDR1
Instant on, 2 minute off-delay

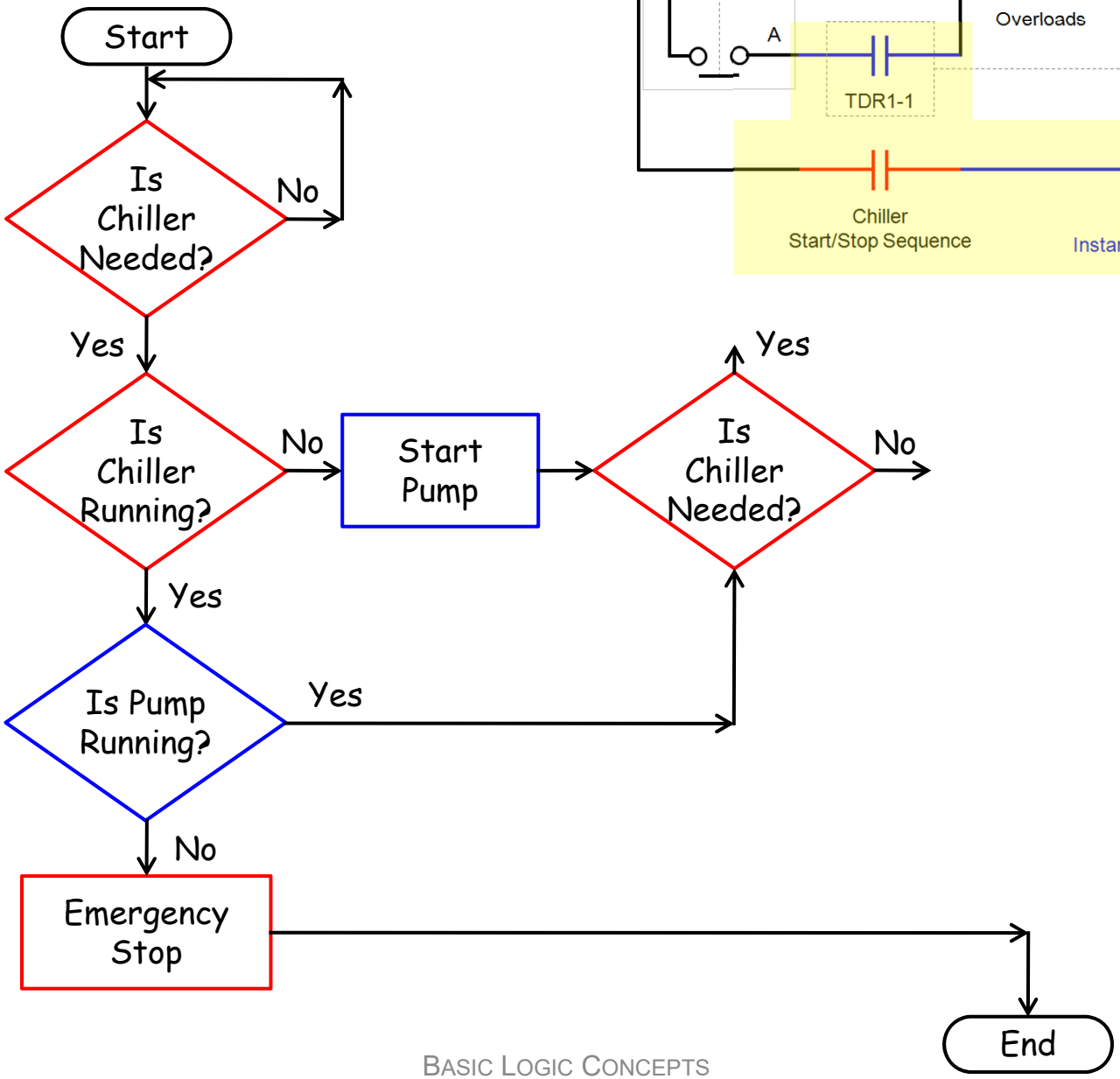
Start
Is Chiller Needed?
No
Yes
Is Chiller Running?
No
Start Pump
Is Chiller Needed?
Yes
No
Yes
Is Pump Running?
Yes
No
Emergency Stop
End

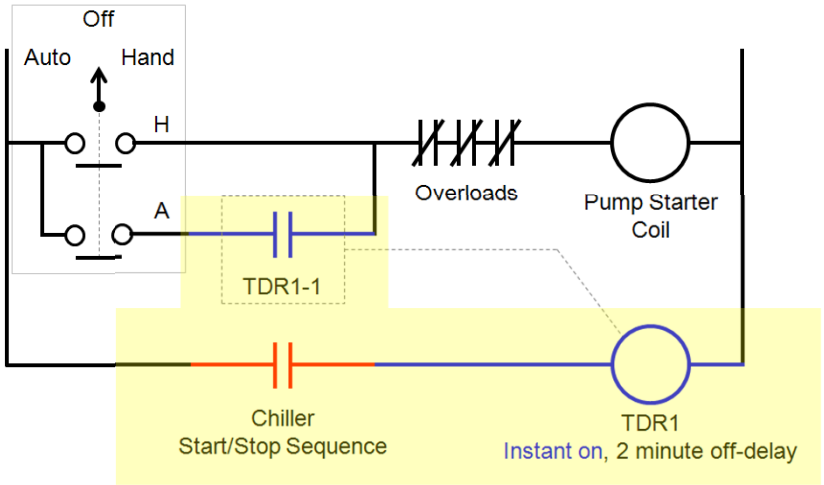
Off
Auto
Hand
H
A
Overloads
Pump Starter Coil
TDR1-1
Chiller Start/Stop Sequence
TDR1
Instant on, 2 minute off-delay

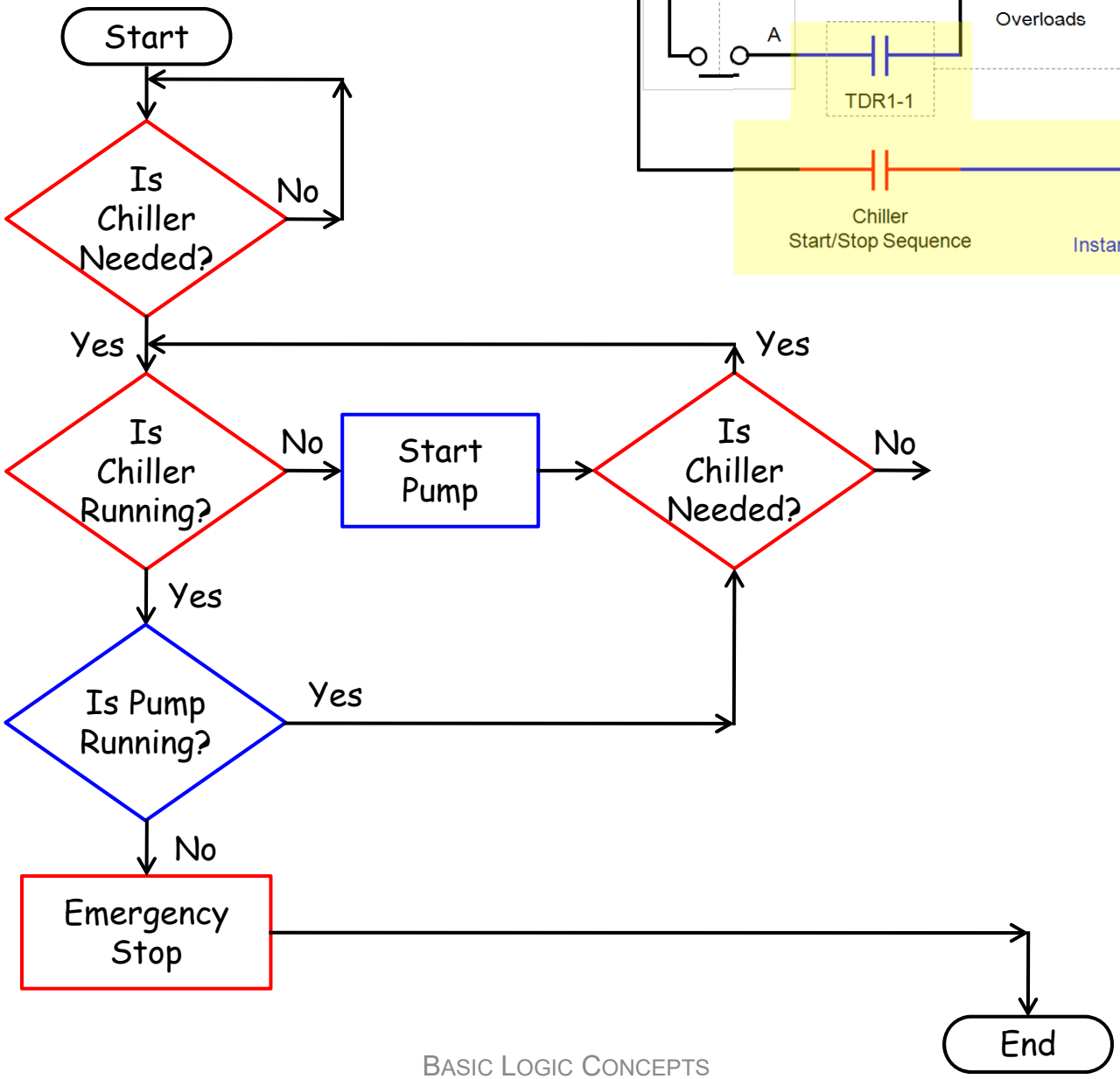
Start
Is Chiller Needed?
No
Yes
Is Chiller Running?
No
Start Pump
Is Chiller Needed?
Yes
No
Yes
Is Pump Running?
Yes
No
Emergency Stop
End

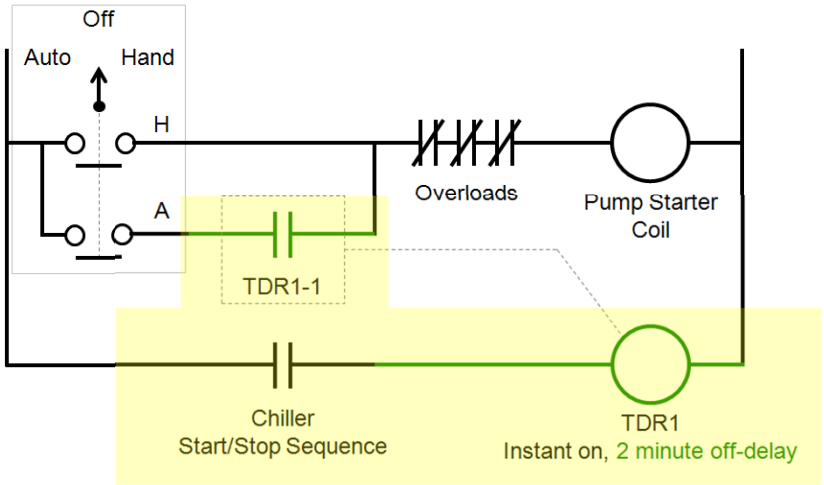
Off
Auto
Hand
H
A
Overloads
Pump Starter Coil
TDR1-1
Chiller Start/Stop Sequence
TDR1
Instant on, 2 minute off-delay

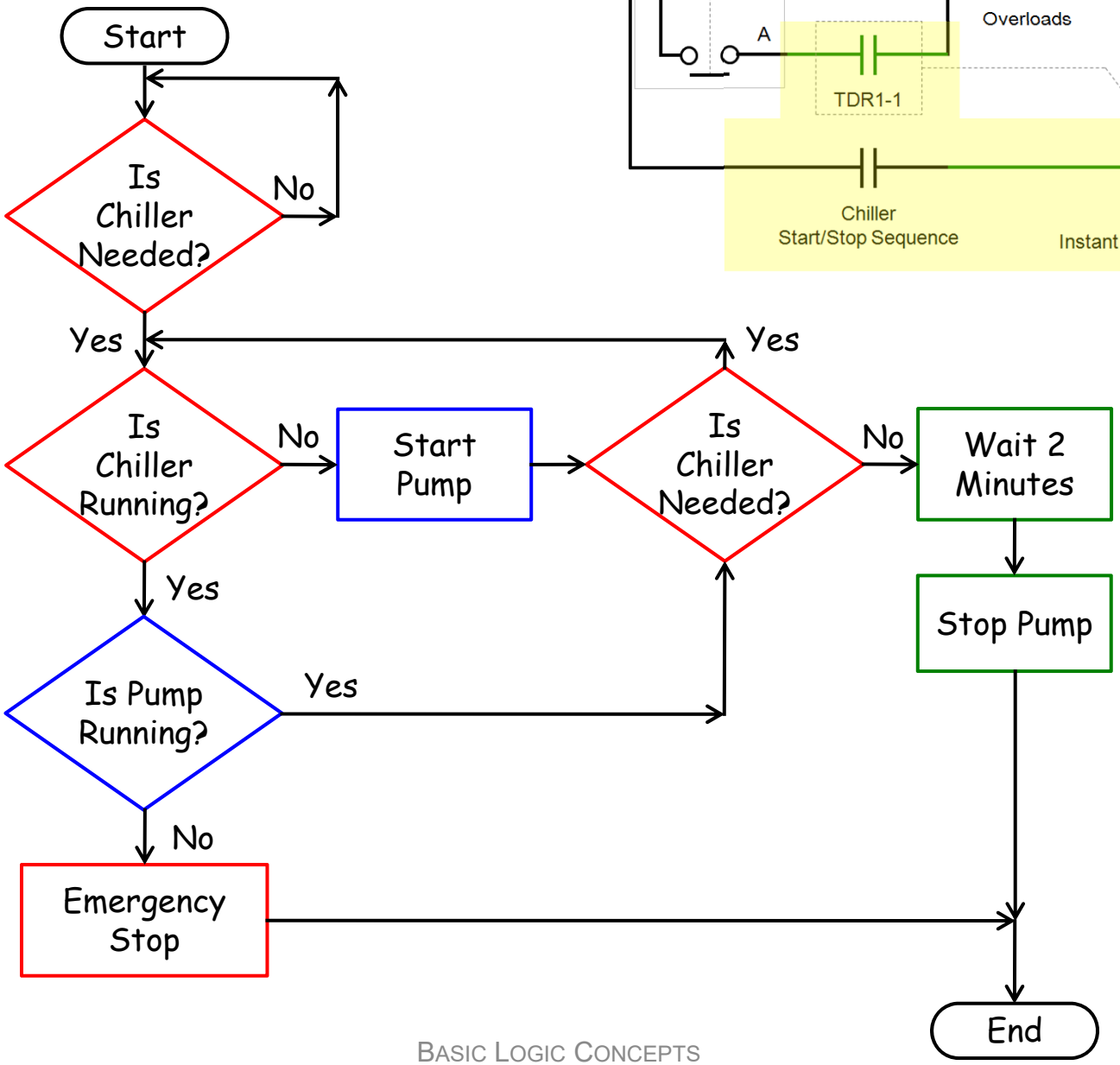
Start
Is Chiller Needed?
No
Yes
Is Chiller Running?
No
Start Pump
Is Chiller Needed?
Yes
No
Wait 2 Minutes
Stop Pump
Yes
Is Pump Running?
Yes
No
Emergency Stop
End

Logic Diagrams; Combining Physical I/O with Flow Chart Logic

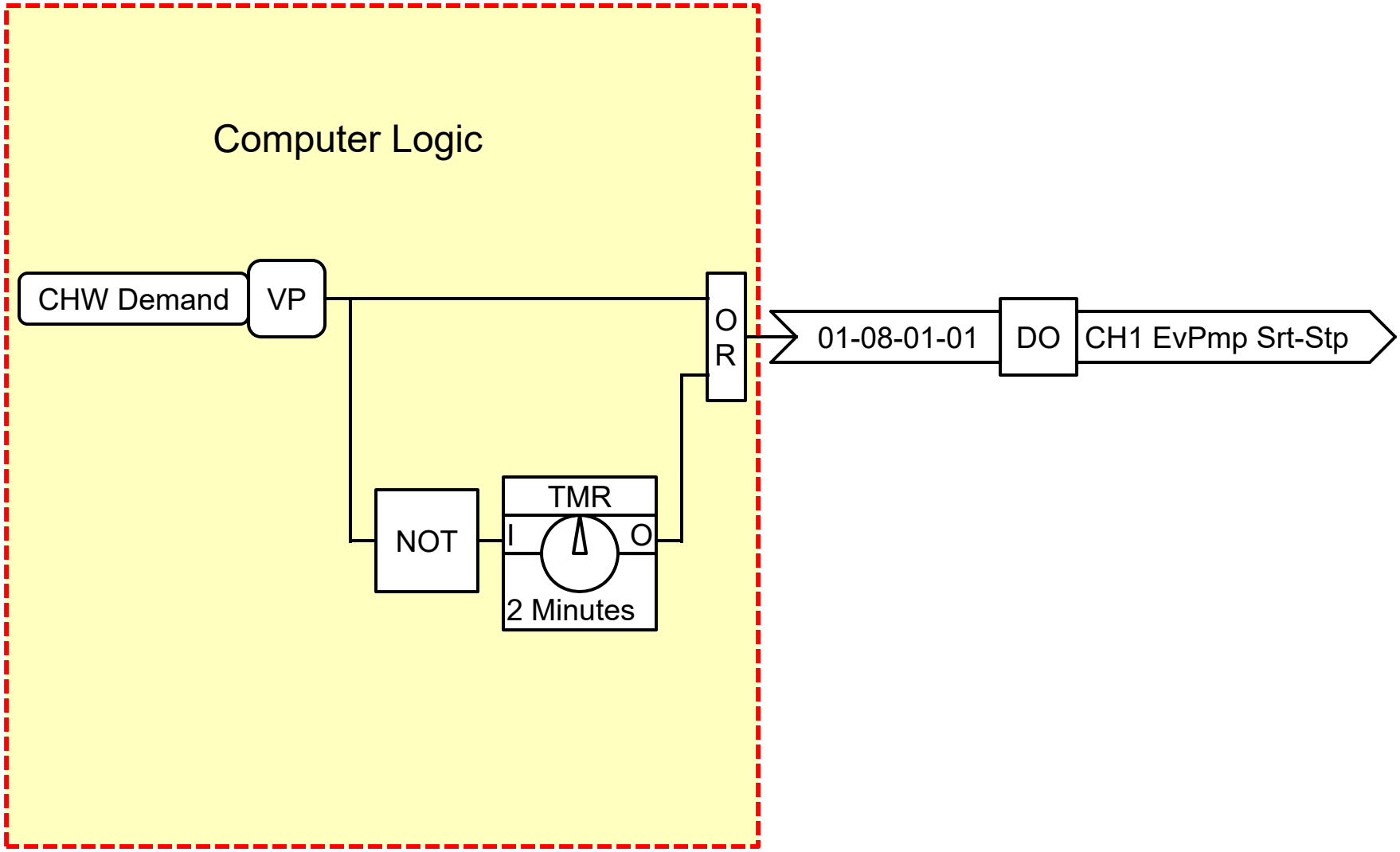

Logic Diagrams; Combining Physical I/O with Flow Chart Logic

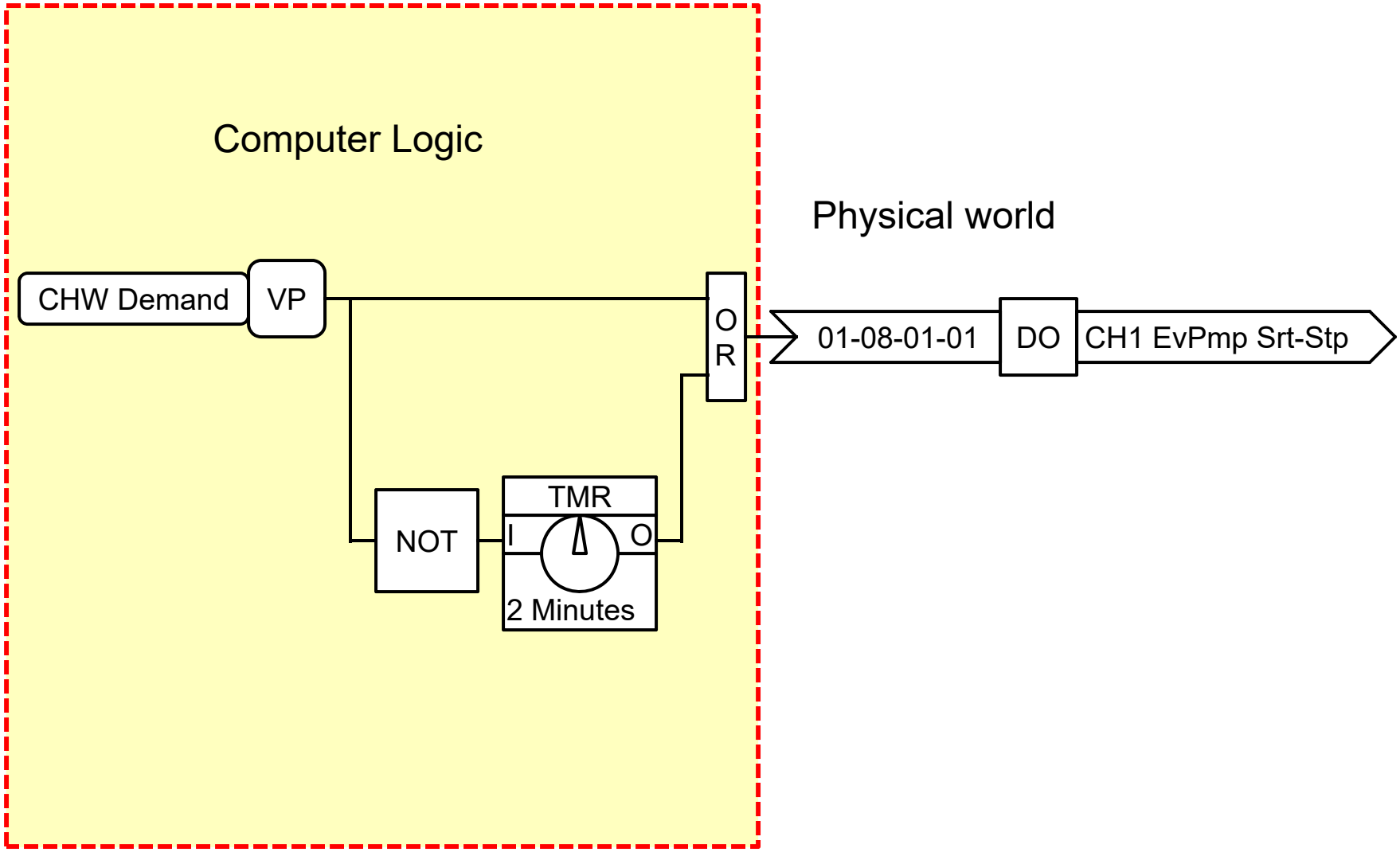

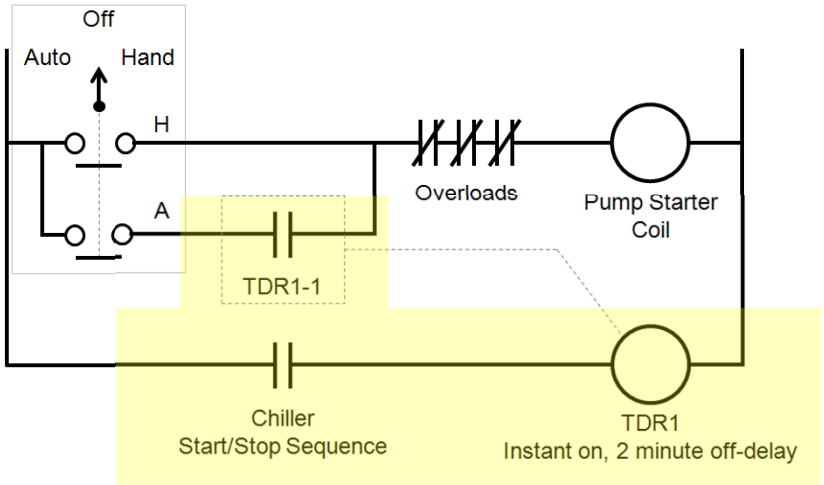
Off
Auto
Hand
H
A
Overloads
Pump Starter
Coil
TDR1-1
Chiller
Start/Stop Sequence
TDR1
Instant on, 2 minute off-delay

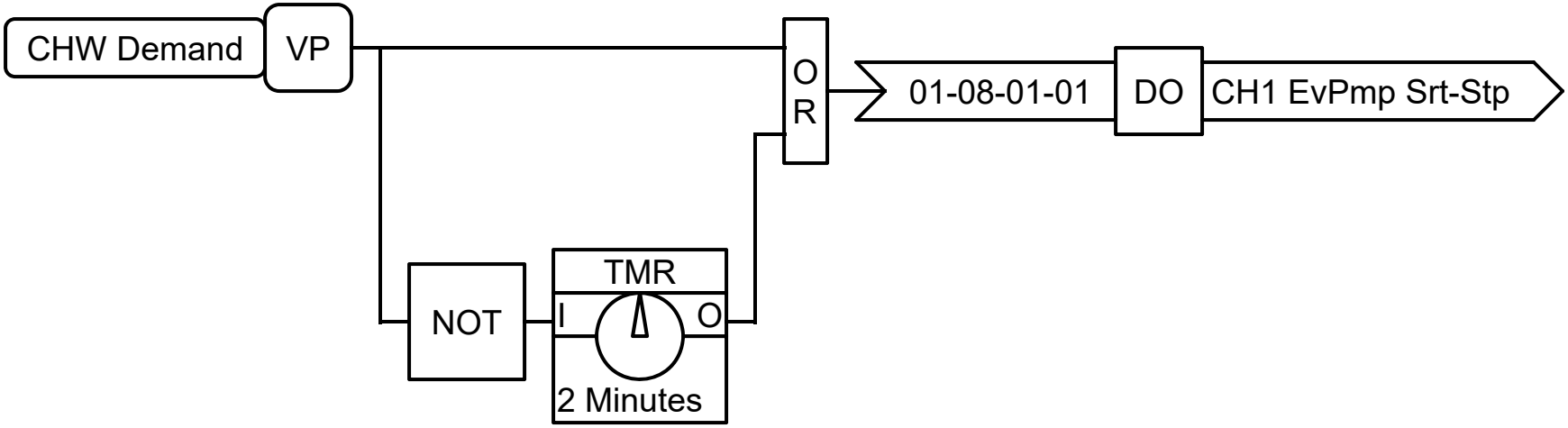
CHW Demand
VP
OR
01-08-01-01
DO
CH1 EvPmp Srt-Stp
NOT
TMR
I
O
2 Minutes

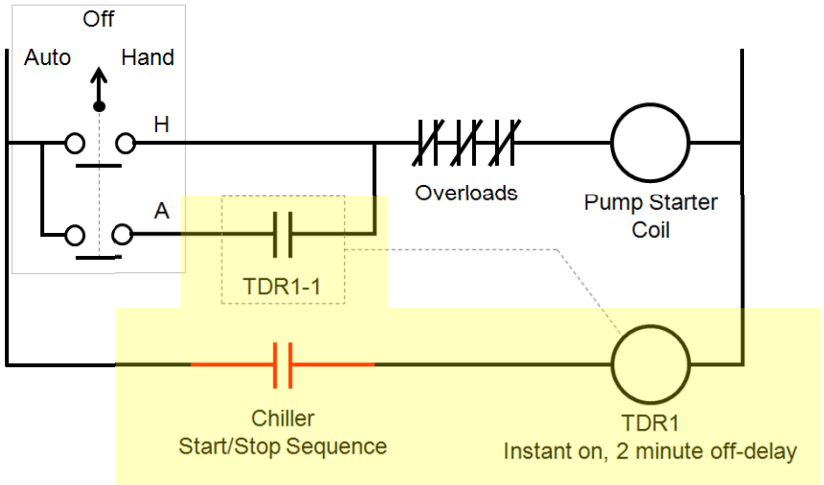
Off
Auto
Hand
H
A
Overloads
Pump Starter
Coil
TDR1-1
Chiller
Start/Stop Sequence
TDR1
Instant on, 2 minute off-delay

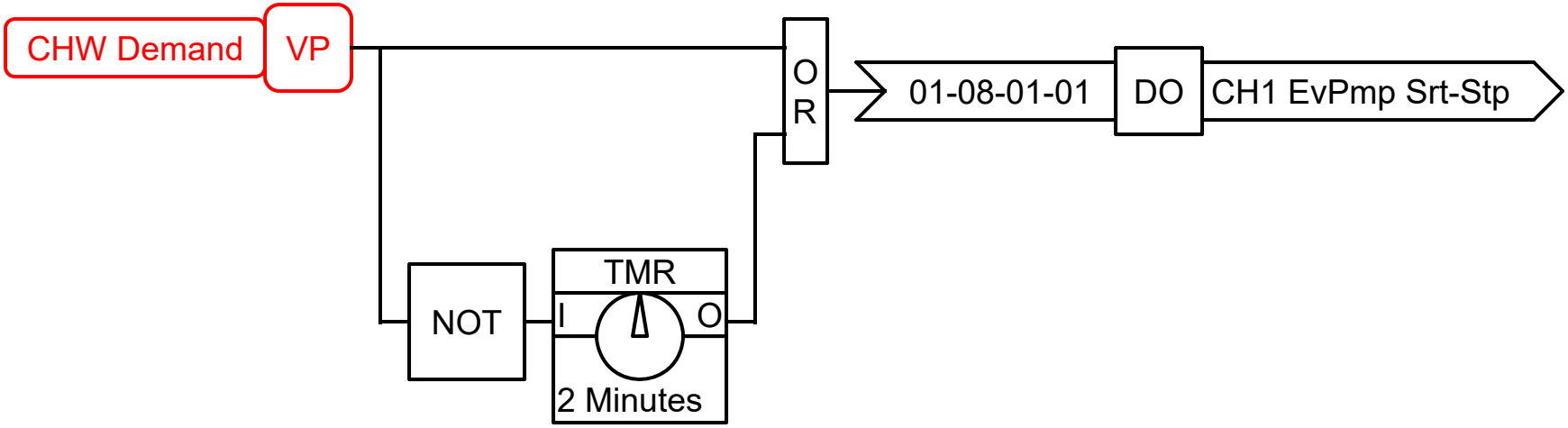
CHW Demand
VP
OR
01-08-01-01
DO
CH1 EvPmp Srt-Stp
NOT
TMR
I
O
2 Minutes

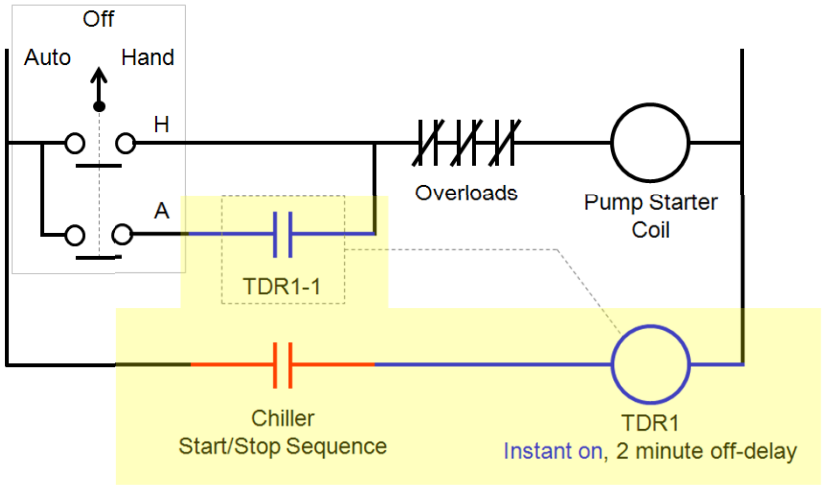
Off
Auto
Hand
H
A
Overloads
Pump Starter
Coil
TDR1-1
Chiller
Start/Stop Sequence
TDR1
Instant on, 2 minute off-delay

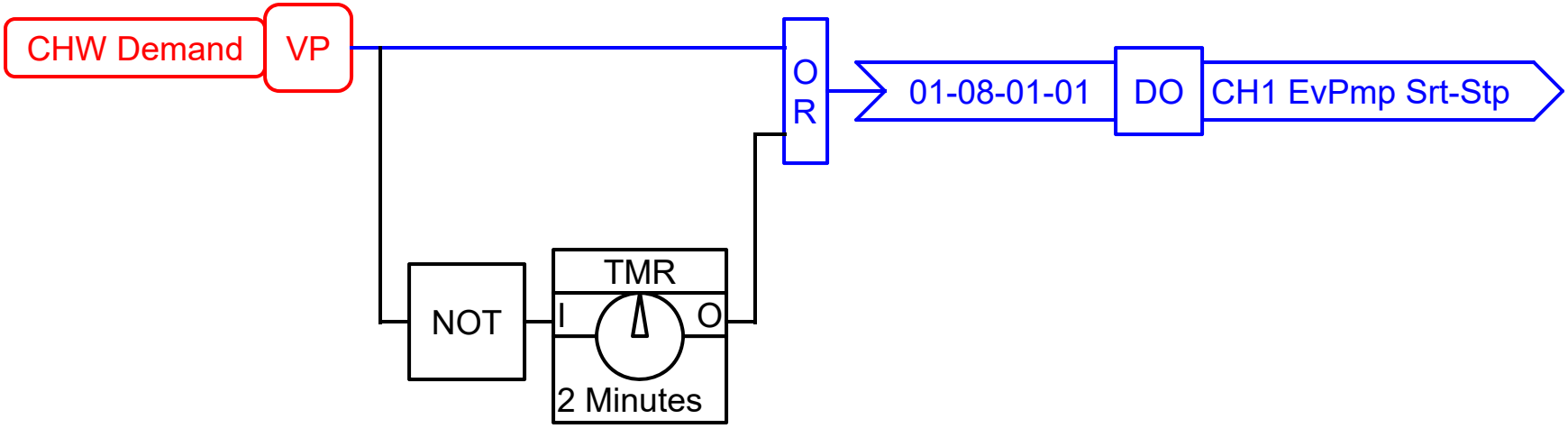
CHW Demand
VP
OR
01-08-01-01
DO
CH1 EvPmp Srt-Stp
NOT
TMR
I
O
2 Minutes

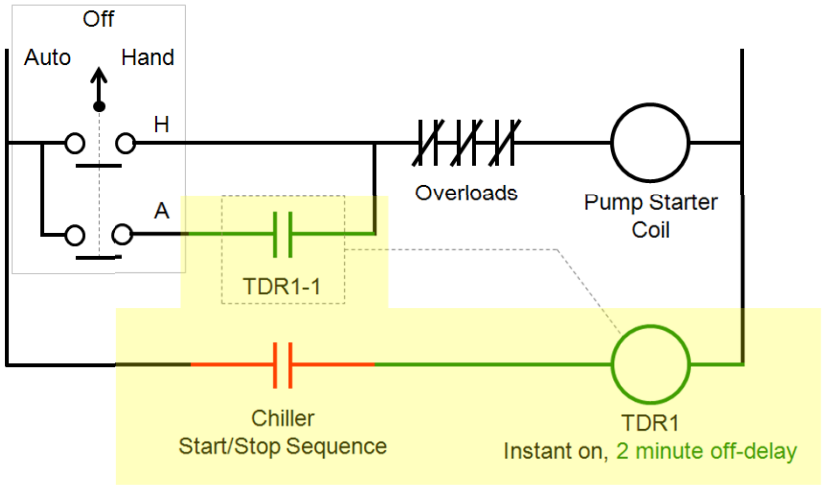
Off
Auto
Hand
H
A
Overloads
Pump Starter
Coil
TDR1-1
Chiller
Start/Stop Sequence
TDR1
Instant on, 2 minute off-delay

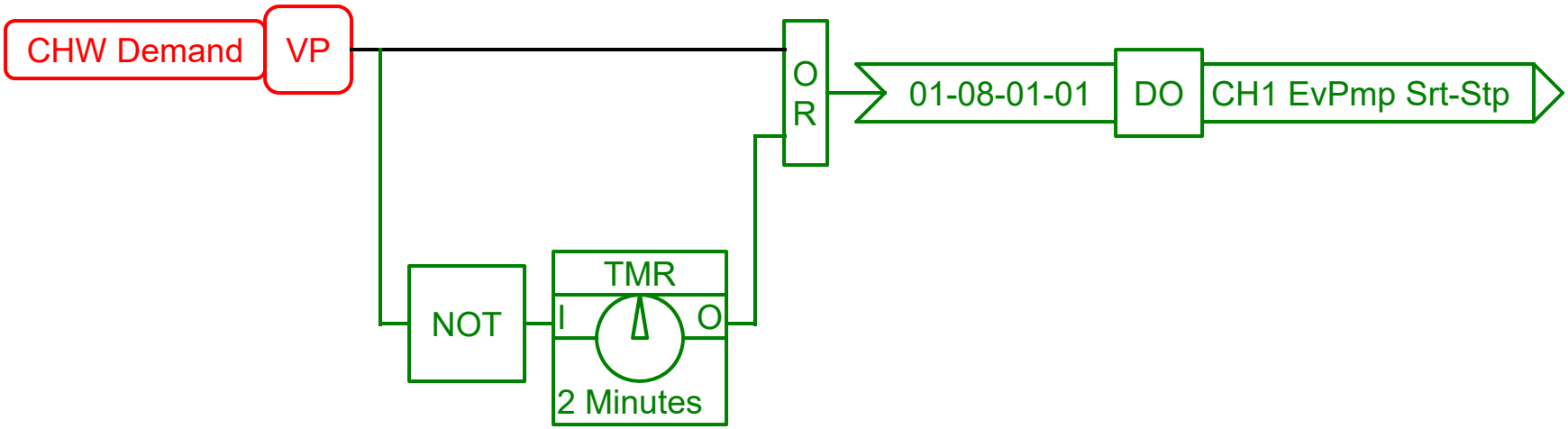
CHW Demand
VP
OR
01-08-01-01
DO
CH1 EvPmp Srt-Stp
NOT
TMR
I
O
2 Minutes

Trouble-shooting is the Control Logic in Reverse

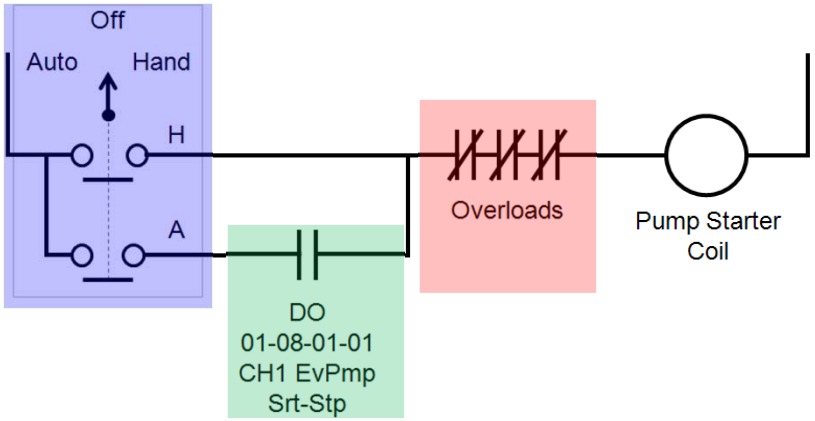

Pump Not Running?

- Is it the overloads?
- Is it the selector switch?
- Is it the control logic?

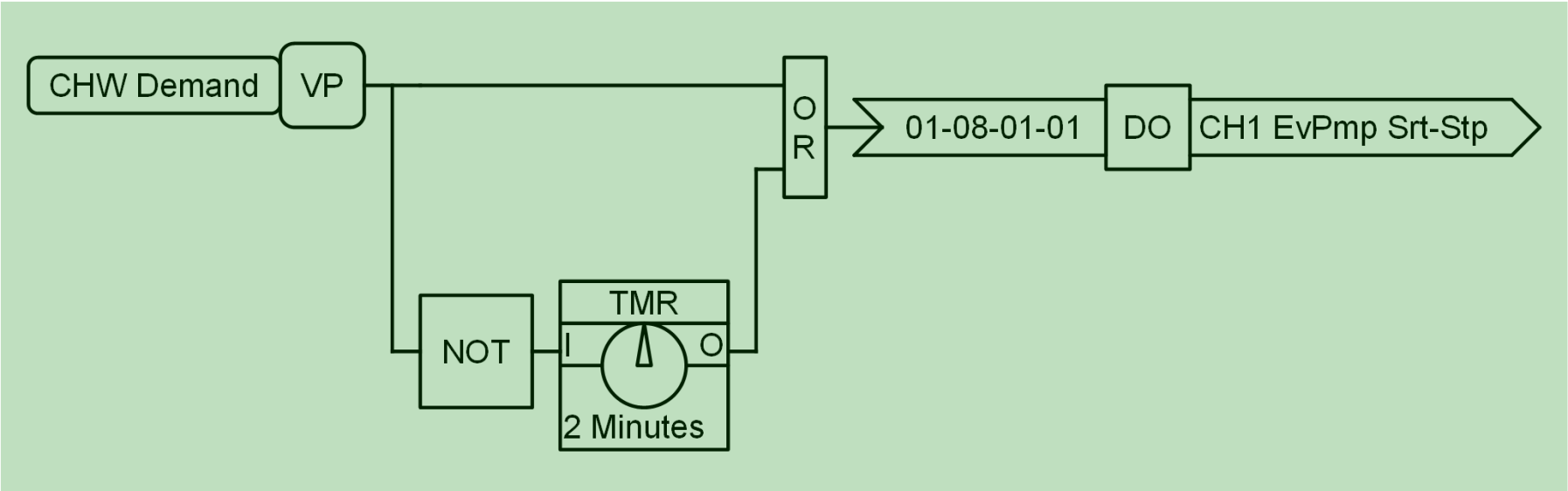

Logic Diagram Symbols

SYMBOL	DESCRIPTION
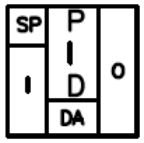	PID CONTROLLER – PROPORTIONAL, INTEGRAL, DERIVATIVE LOOPS USE STANDARD ALGORITHMS TO CALCULATE AN OUTPUT BASED ON A VARIABLE INPUT. PROPORTIONAL IS BASED ON THE DIFFERENCE BETWEEN THE INPUT AND THE SETPOINT. INTEGRAL IS BASED ON THE THE TIME THE INPUT DEVIATES FROM THE SETPOINT. DERIVATIVE IS BASED ON THE THE RATE THE INPUT IS APPROACHING THE SETPOINT. THE PID CAN BE EITHER DIRECT ACTING (DA) OR REVERSE ACTING (RA). IN A DA PID WHEN THE INPUT INCREASES THE OUTPUT INCREASES. IN A RA PID WHEN THE INPUT INCREASES THE OUTPUT DECREASES.

- Not all PID algorithms are the same
- Not all auto-tune algorithms are the same

Add Enhancements

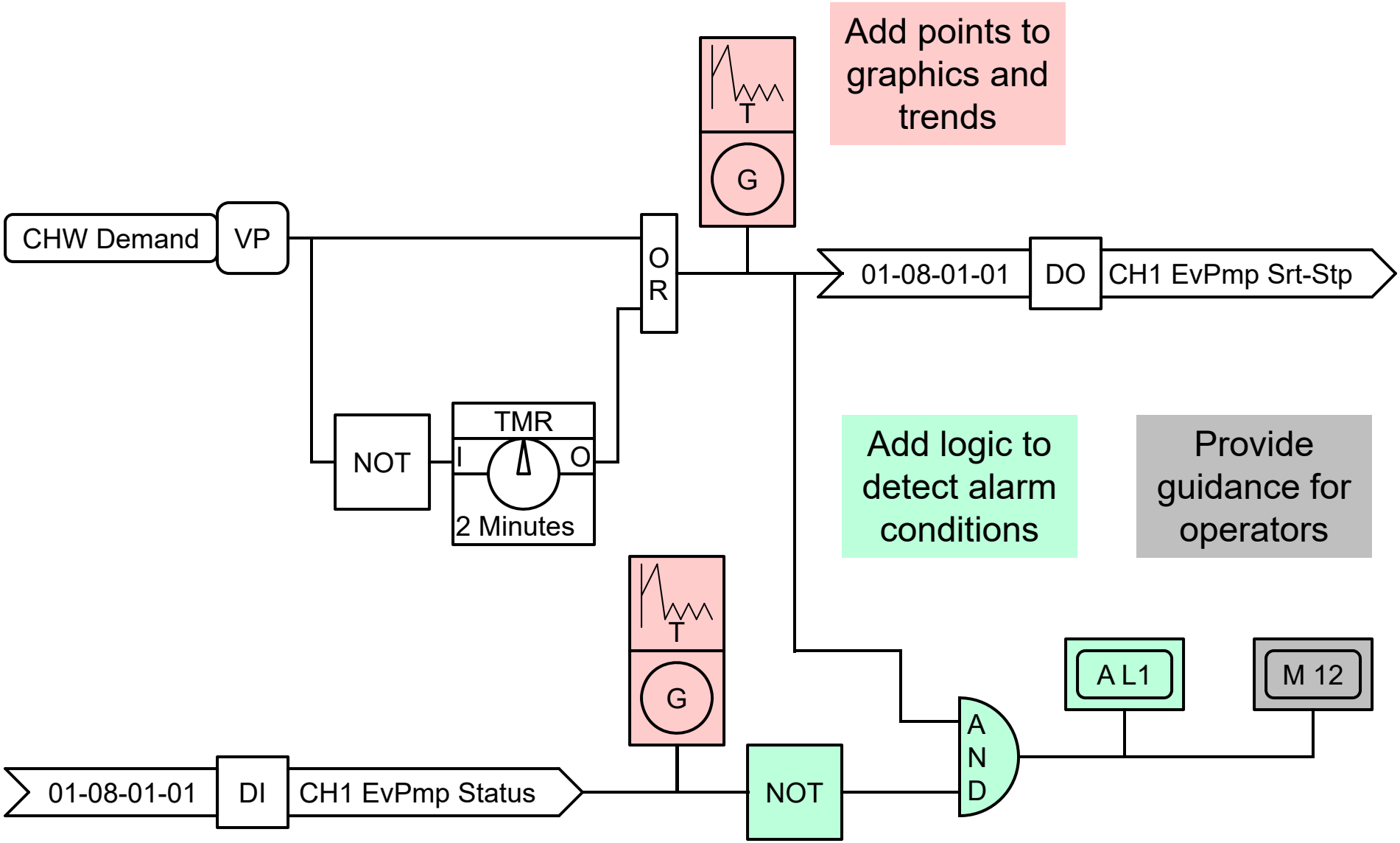

The Complete Picture

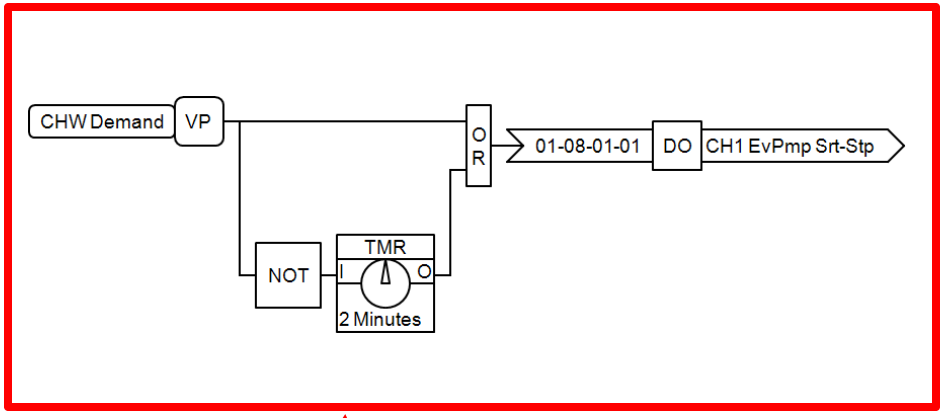

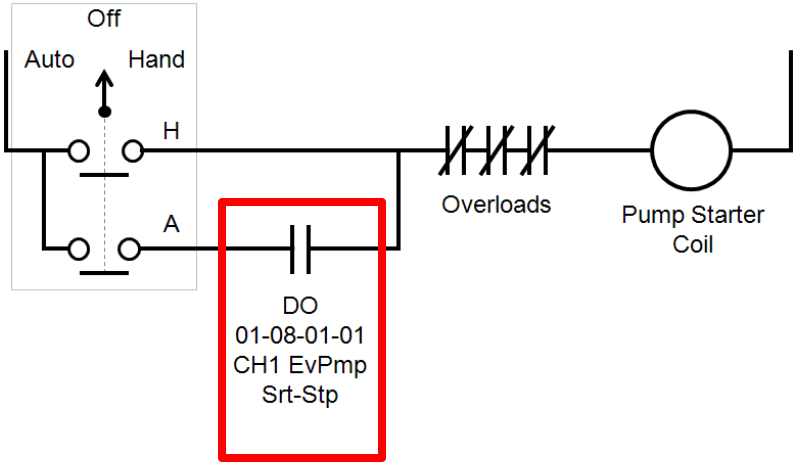

This …

… describes how this works

Monitoring Run Time

Is this …

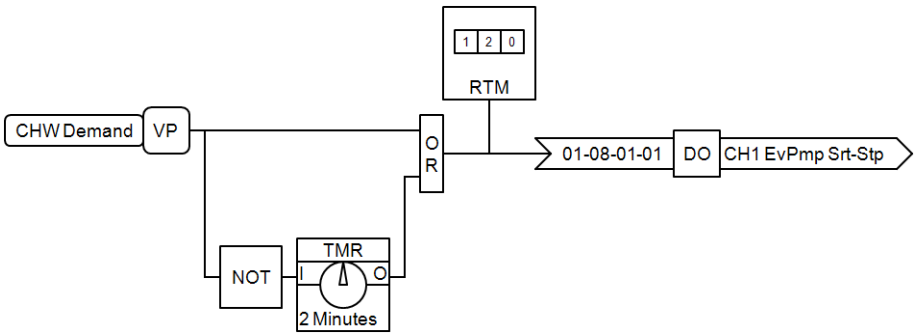

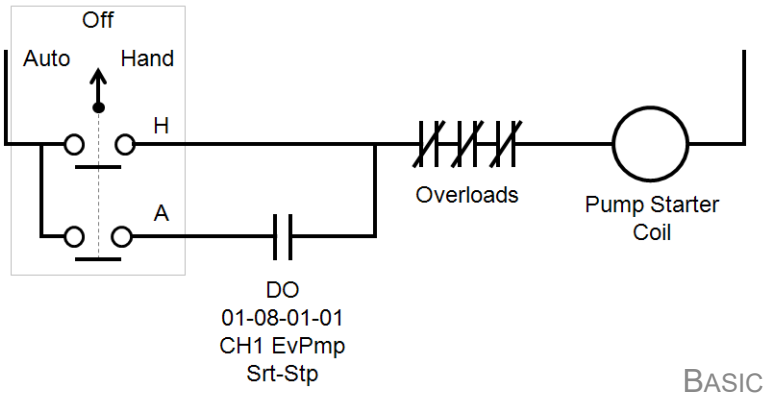

… the same as this?

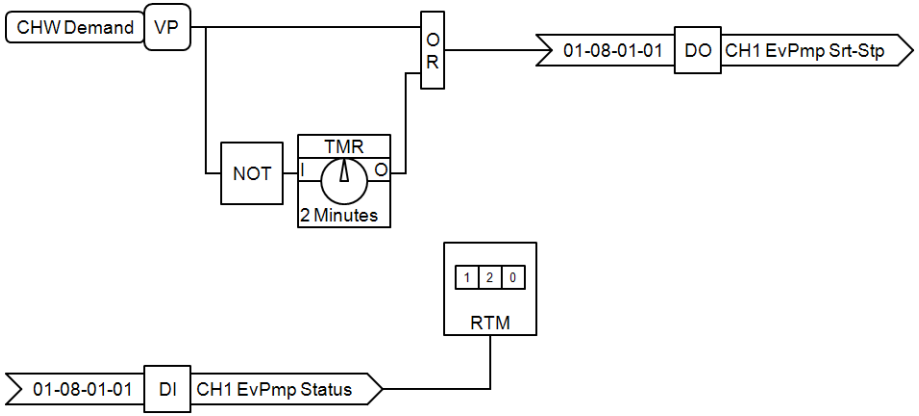

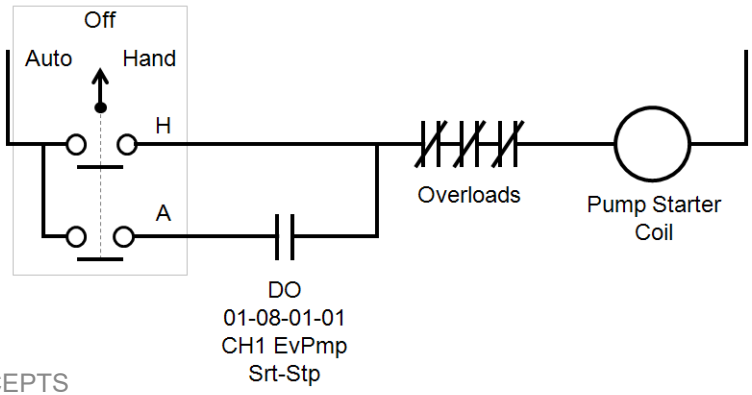

Jay Santos's 8 Steps for Developing Control Logic

1. Identify the devices to be controlled in the system (a.k.a. the *controlled variable*)
2. Figure out what you have to do to control each device
3. Figure out what you need to monitor to let you control each device (a.k.a. the *process variable*)
4. Figure out how to make the process variable interact appropriately with the controlled variable
5. Figure out what other things (secondary control processes) impact the primary control process for each device
6. Figure out how to monitor the secondary control processes and integrate them with the primary control process
7. Figure out if there are any limiting conditions that apply to the control process
8. Write it all down
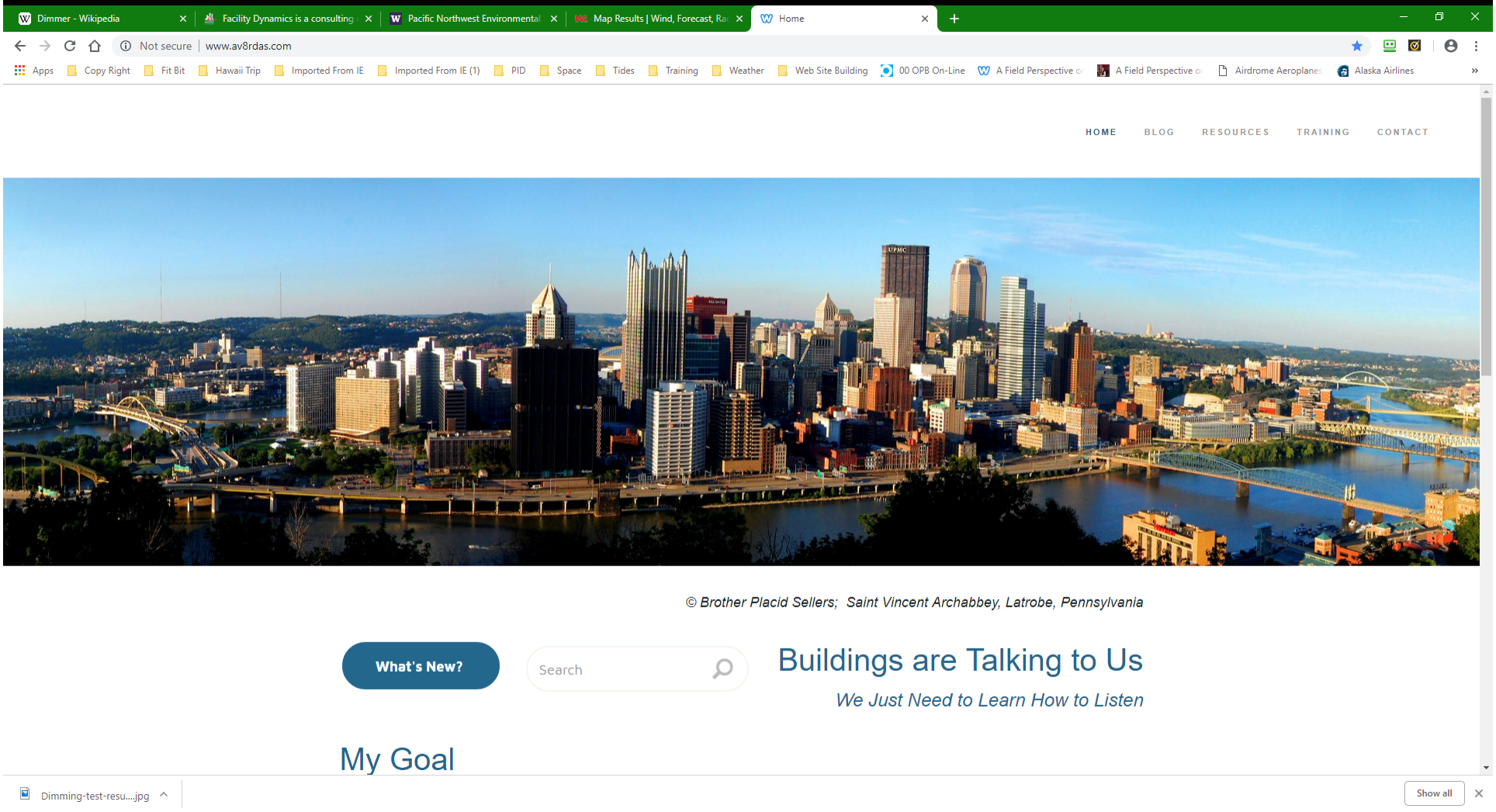
Some Resources