Control Systems: Design, Performance and Commissioning Issues

Control Process Logic

Instructor:

David Sellers

Senior Engineer

Facility Dynamics Engineering

October 23, 2017

Control Systems: Design, Performance and Commissioning Issues

Control Process Logic

Overview

Instructor:

David Sellers

Senior Engineer

Facility Dynamics Engineering

October 23, 2017

Control Logic

The key to implementing control processes

- Relays = Digital Logic

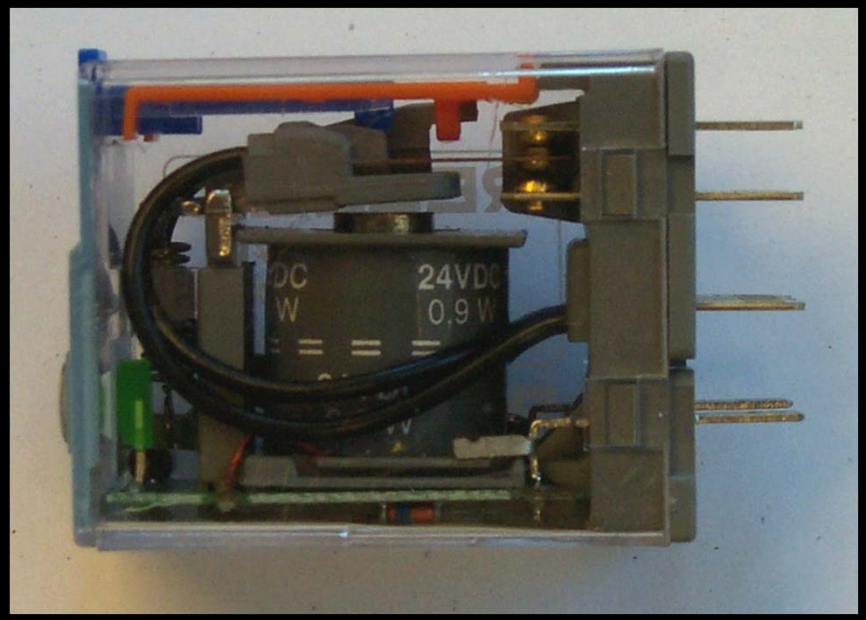

Control Logic

The key to implementing control processes

- Relays = Digital Logic
- Pneumatic Controls = Analog Logic

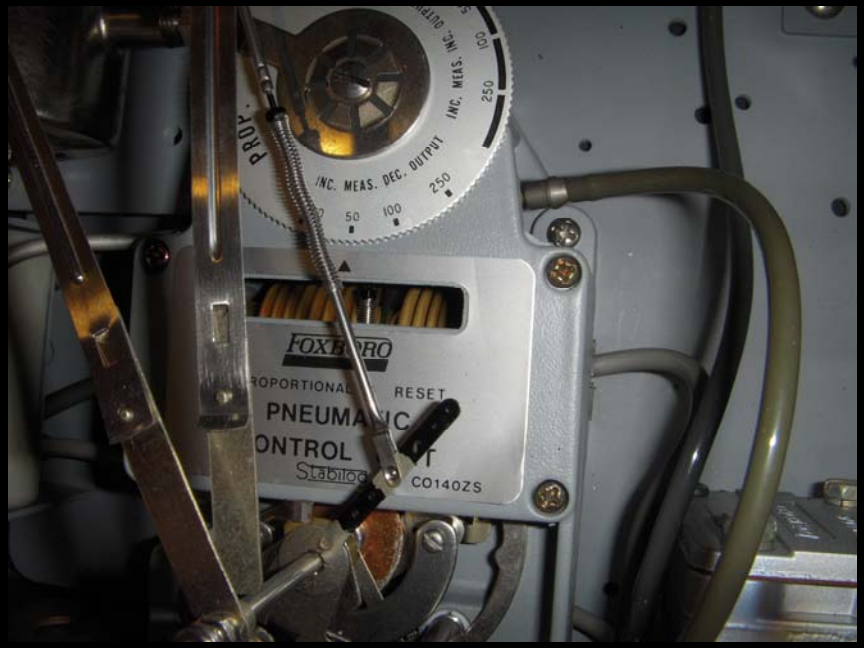

Control Logic

The key to implementing control processes

- Relays = Digital Logic
- Pneumatic Controls = Analog Logic
- Computers use digital logic to implement both digital and analog processes

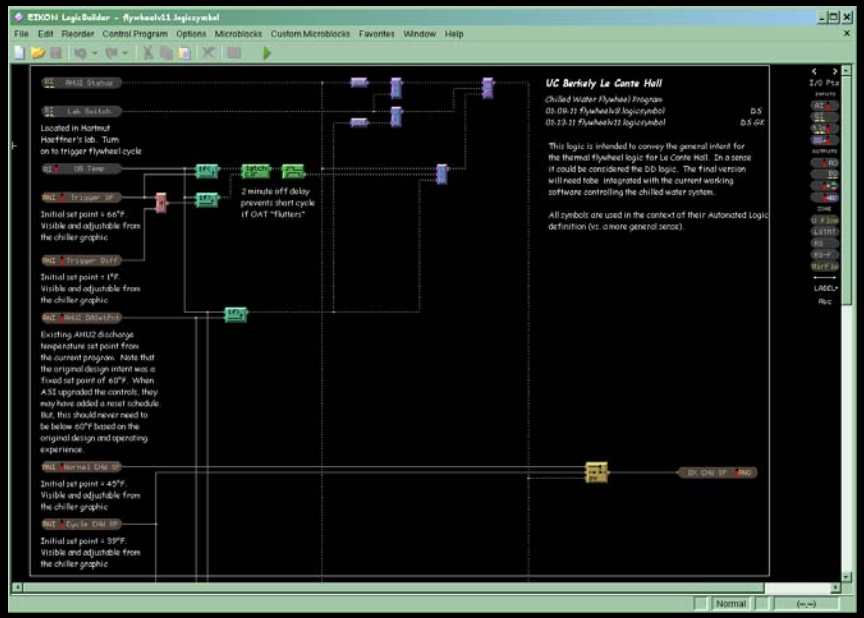

Control Logic

The key to capturing energy savings

- 90% of all Cx/EBCx solutions involve controls
- LeConte Hall savings captured with revised control logic
- LeConte Hall savings = $3,830 per year

See [Retrocommissioning Findings: Leveraging a Chilled Water System Thermal Flywheel to Save Energy and Compressors – Overview]() on my blog for details

Boolean Algebra; The Fundamental Principle Behind Computer Logic

- Boolean algebra is the algebra of two values
  - 0 and 1
  - True and False
- Computers are machines that “think” using two values
- Boolean algebra can represent how computers think
- “Truth tables” represent the result of Boolean operations

Relay Logic = A Form of Boolean Algebra

Open Contact = 0; Closed Contact = 1

Both contacts have to be closed to get current from A to B

0 AND 1	0	1
0	0	0
1	0	1

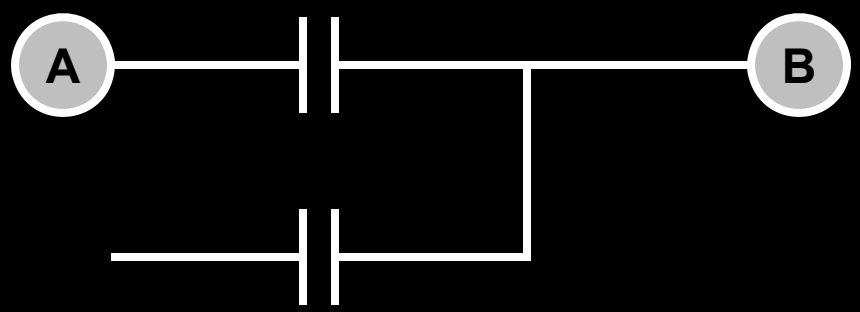

Either or both contacts being closed will get current from A to B

0 OR 1	0	1
0	0	1
1	1	1

Facility Dynamics
ENGINEERING

Control Processes

Relay Logic Example

www.FacilityDynamics.com

Controlling an Evaporator Pump with Relay Logic

The Narrative Sequence

- When the Hand-Off-Auto switch (HOA) is in Auto
  - The evaporator pump shall start when the chiller it is associated with is enabled for operation
  - The evaporator pump shall remain in operation for two minutes and then shut down when the chiller it is associated with is disabled
- When the HOA switch is in “Hand” the evaporator pump shall run continuously
- No matter what position the HOA switch is in, the evaporator pump shall shut down if the motor overloads are tripped

Controlling an Evaporator Pump with Relay Logic

JIC (Joint Industry Council) ladder diagram symbol list available from Womack Machine Supply Co. website at http://www.womackmachine.com/pdf/rb365/10p430-1.pdf

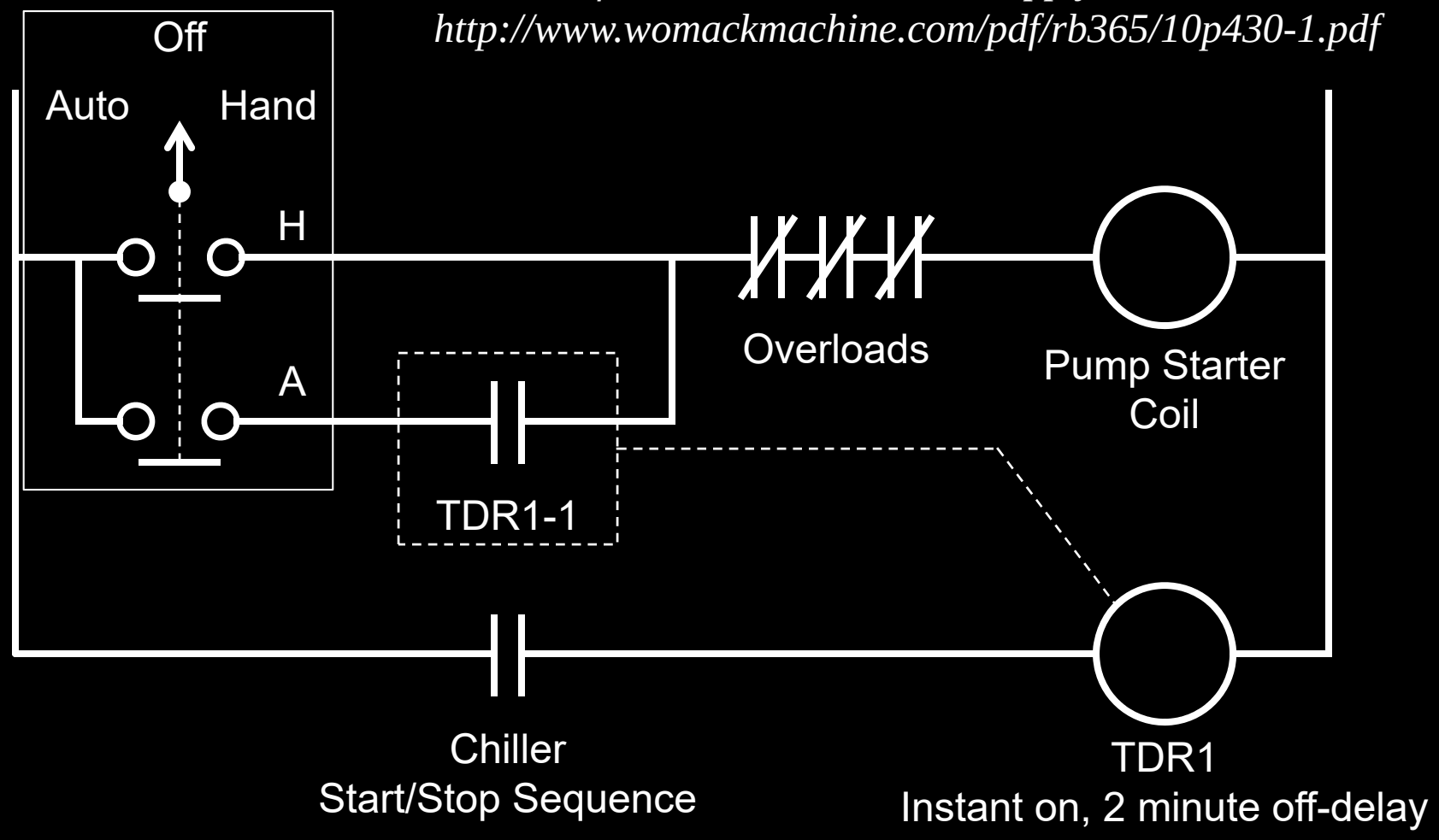

Controlling an Evaporator Pump with Relay Logic

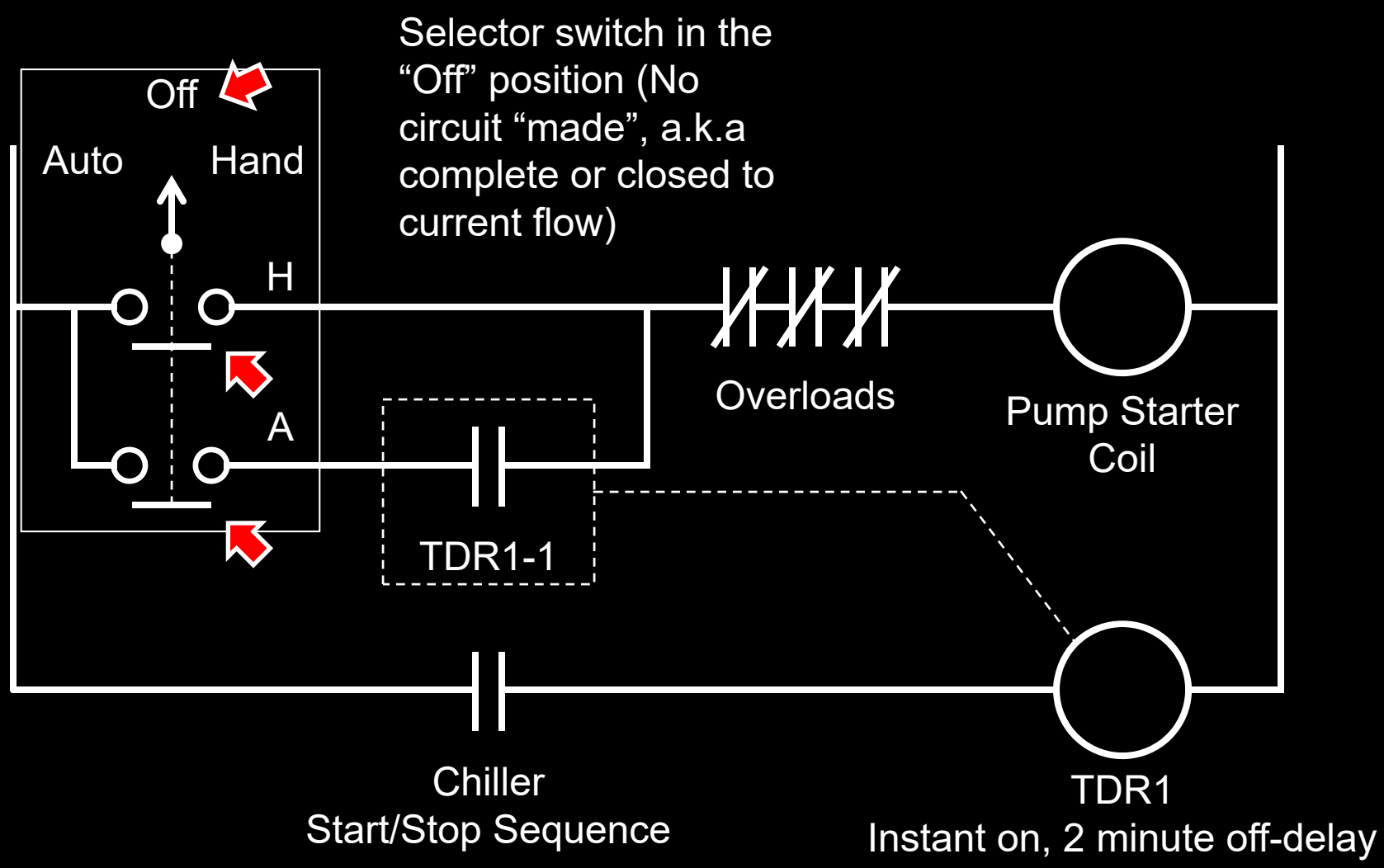

Controlling an Evaporator Pump with Relay Logic

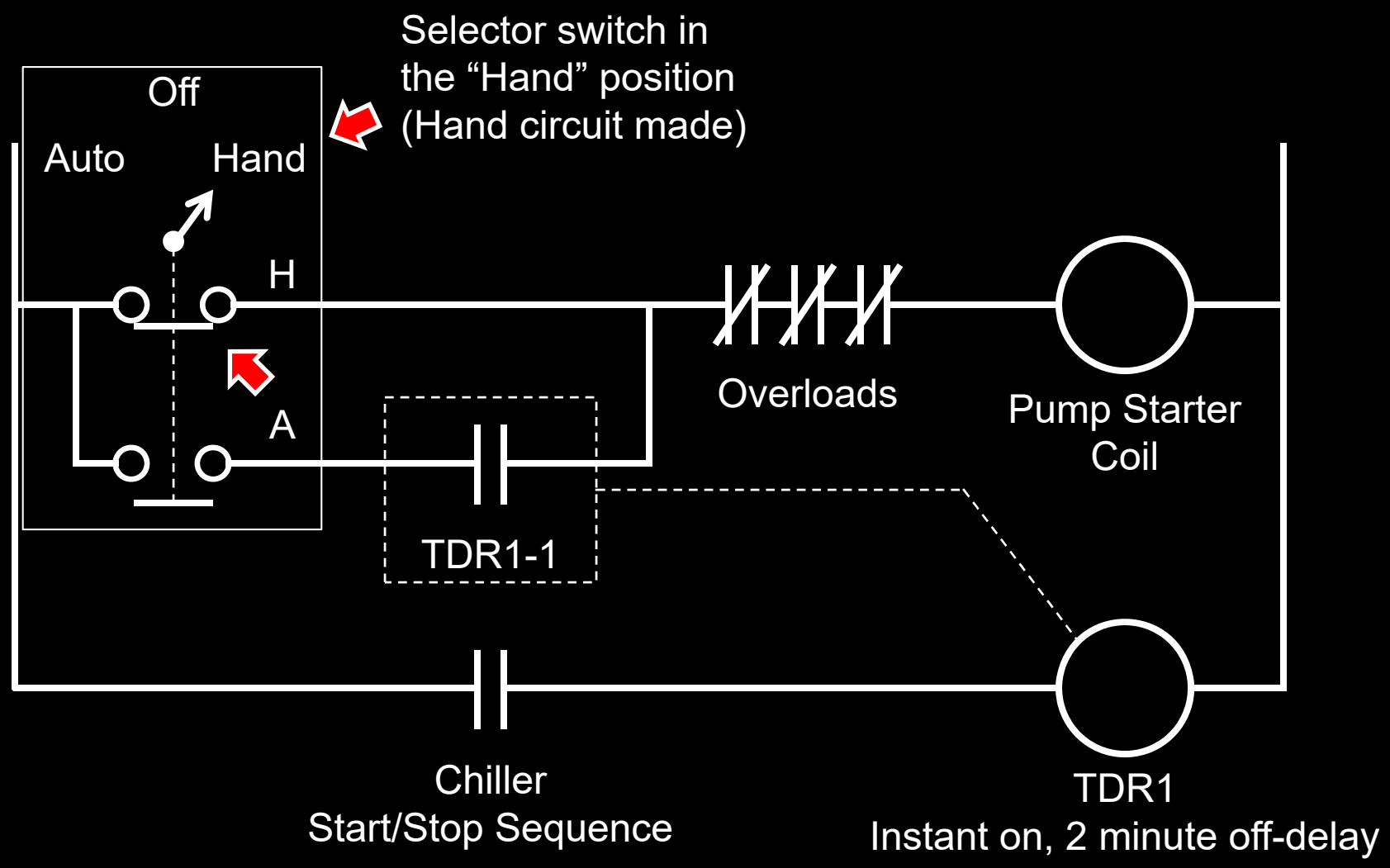

Controlling an Evaporator Pump with Relay Logic

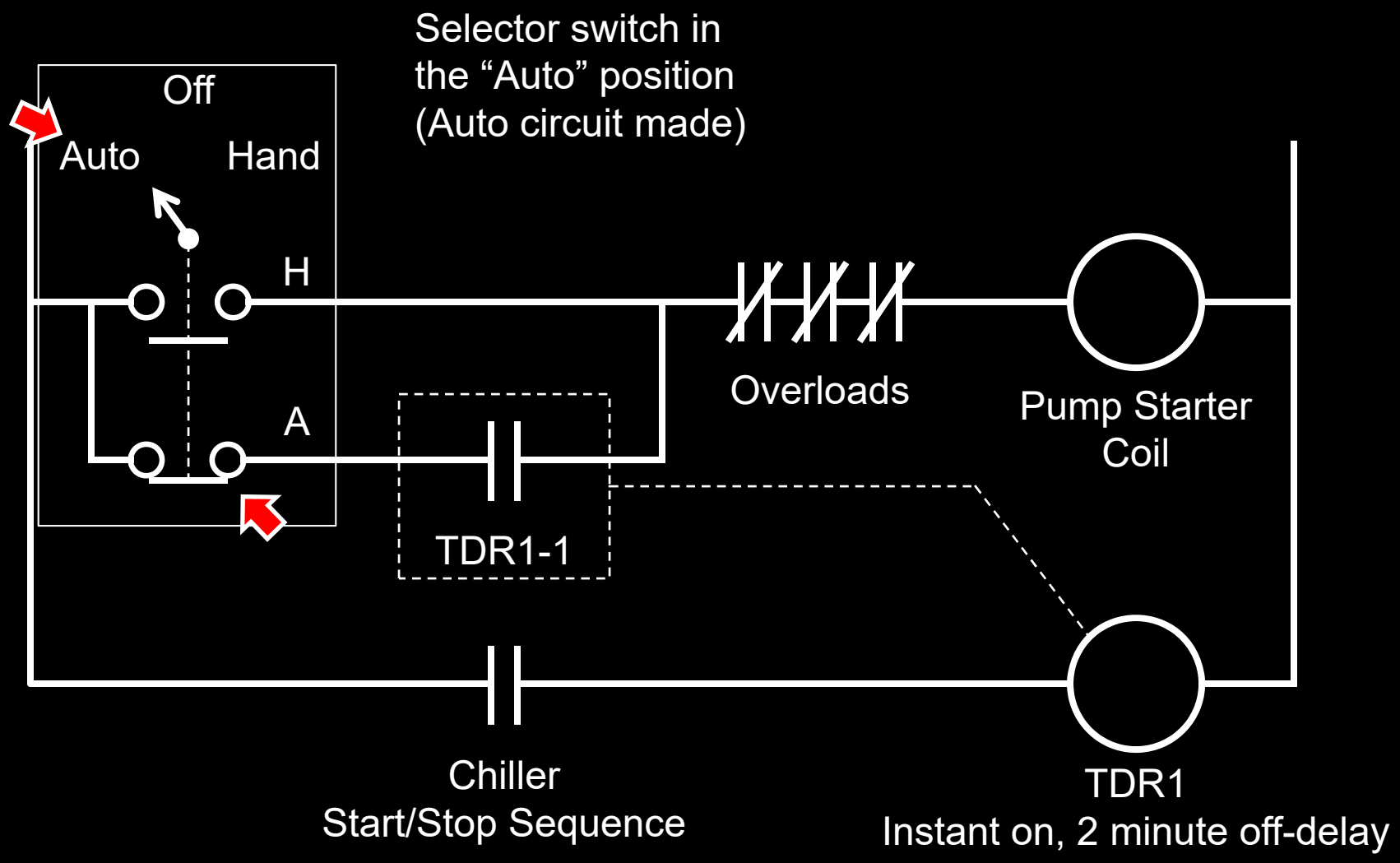

Controlling an Evaporator Pump with Relay Logic

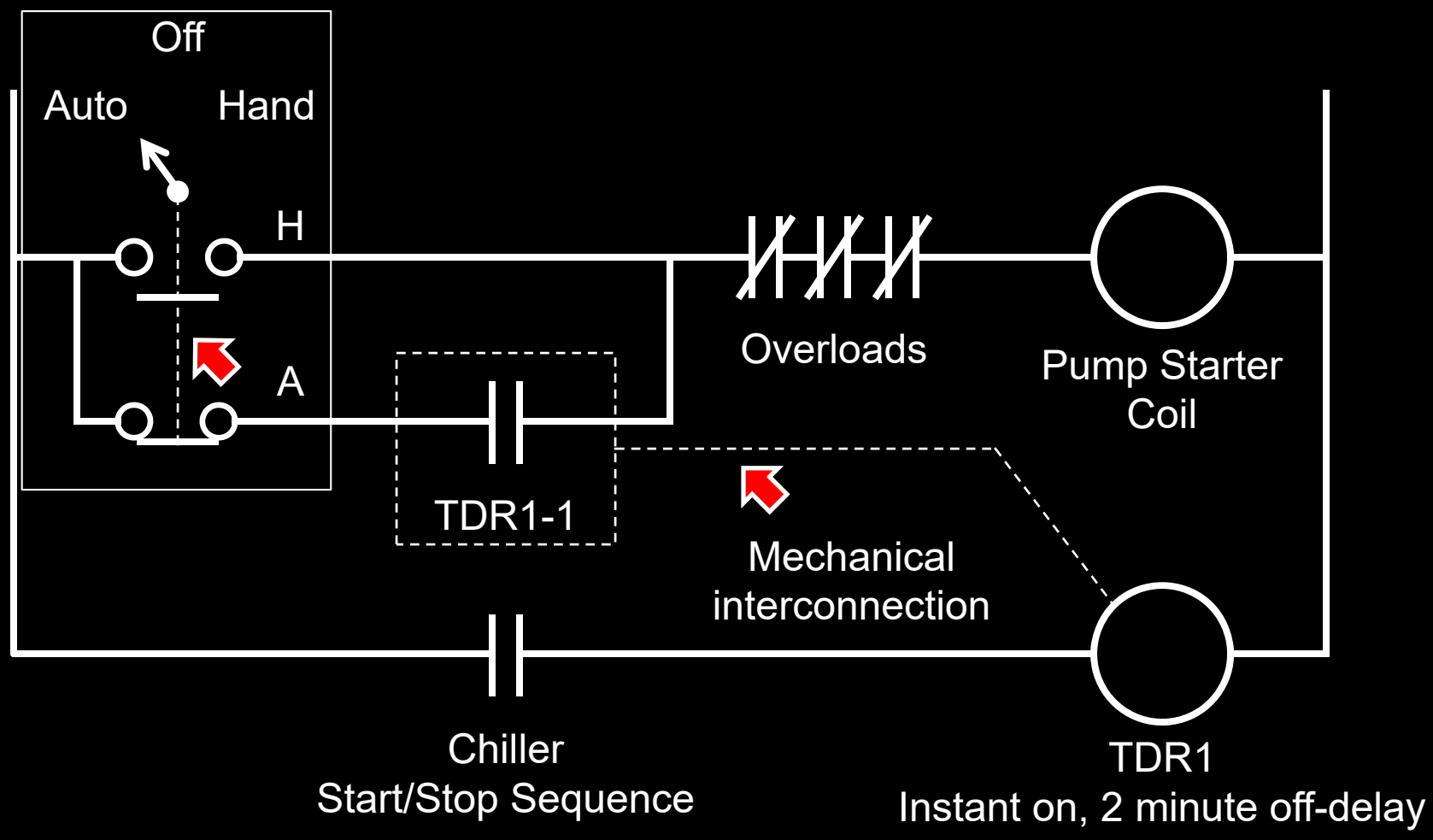

Controlling an Evaporator Pump with Relay Logic

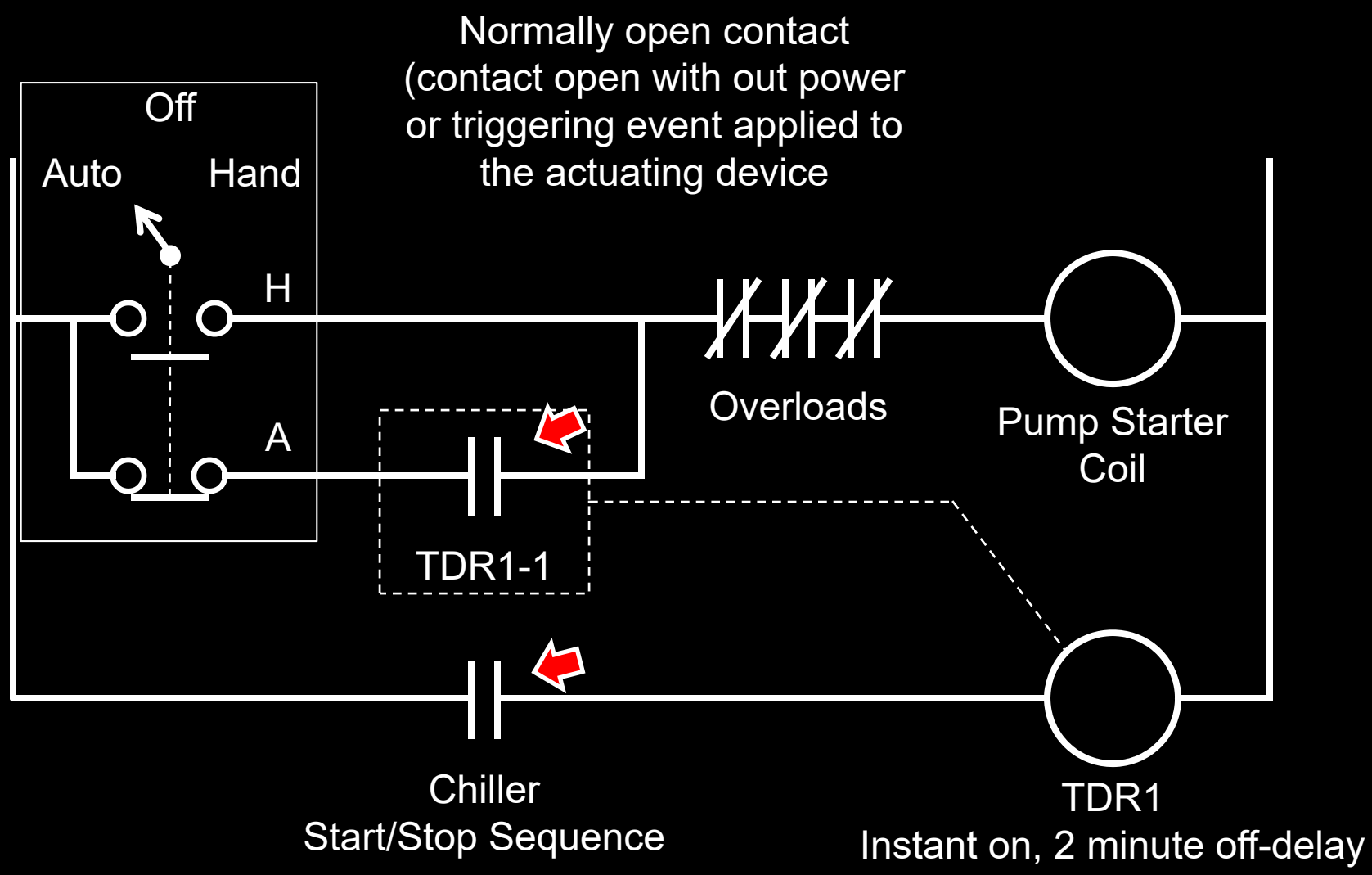

Controlling an Evaporator Pump with Relay Logic

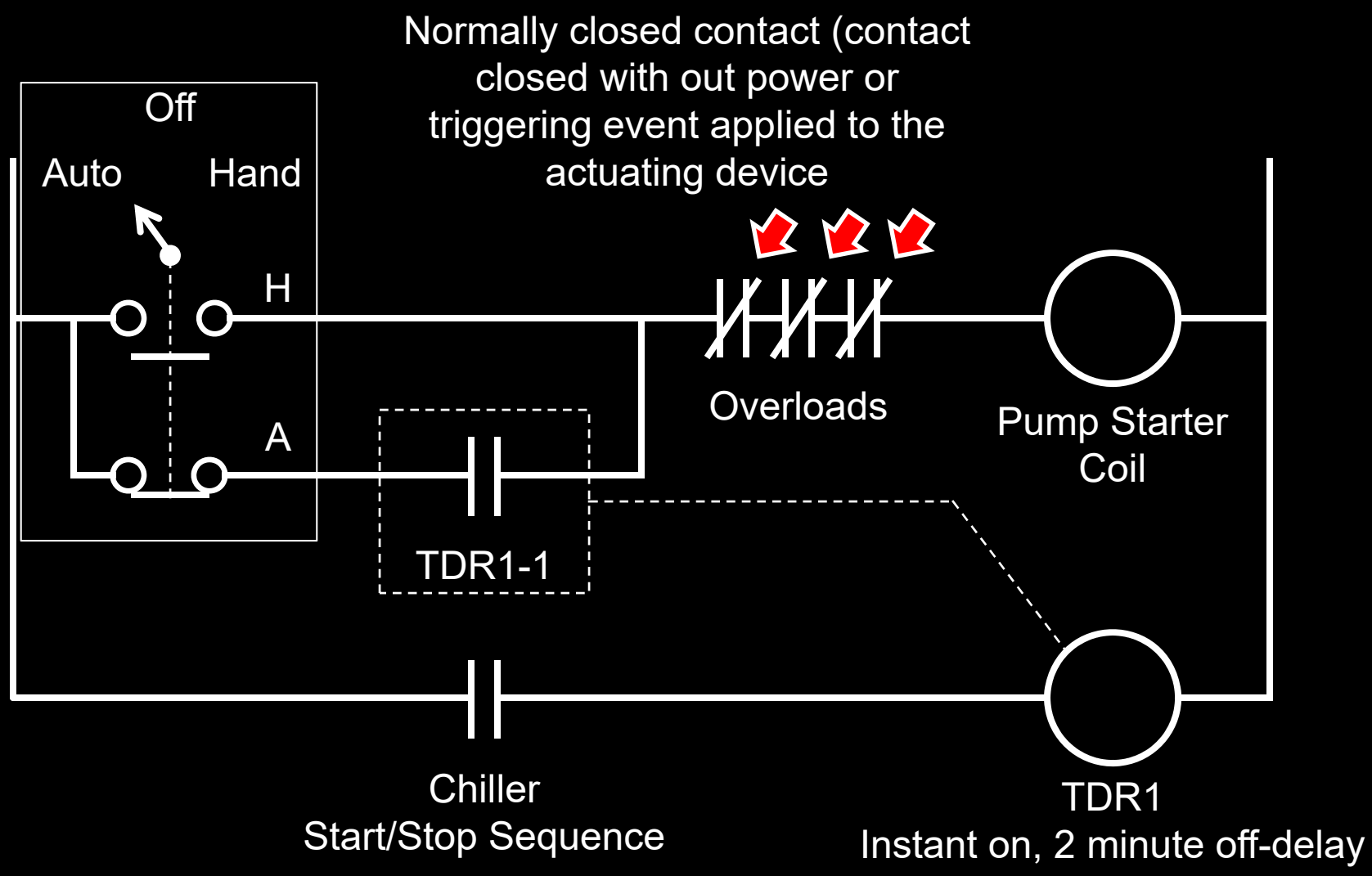

Controlling an Evaporator Pump with Relay Logic

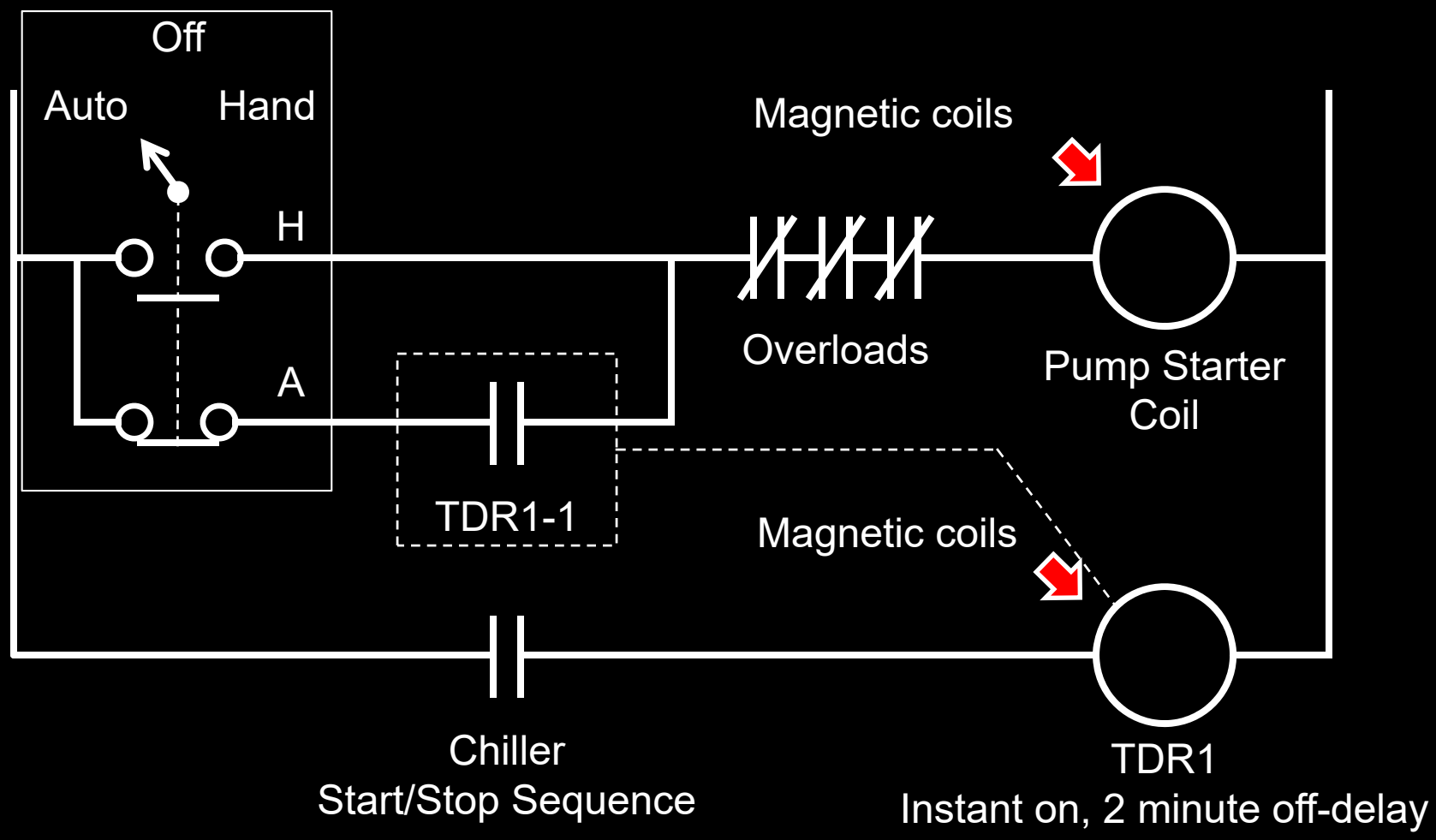

Controlling an Evaporator Pump with Relay Logic

Design Intent: In “Auto”, start the pump when required by the chiller start sequence.

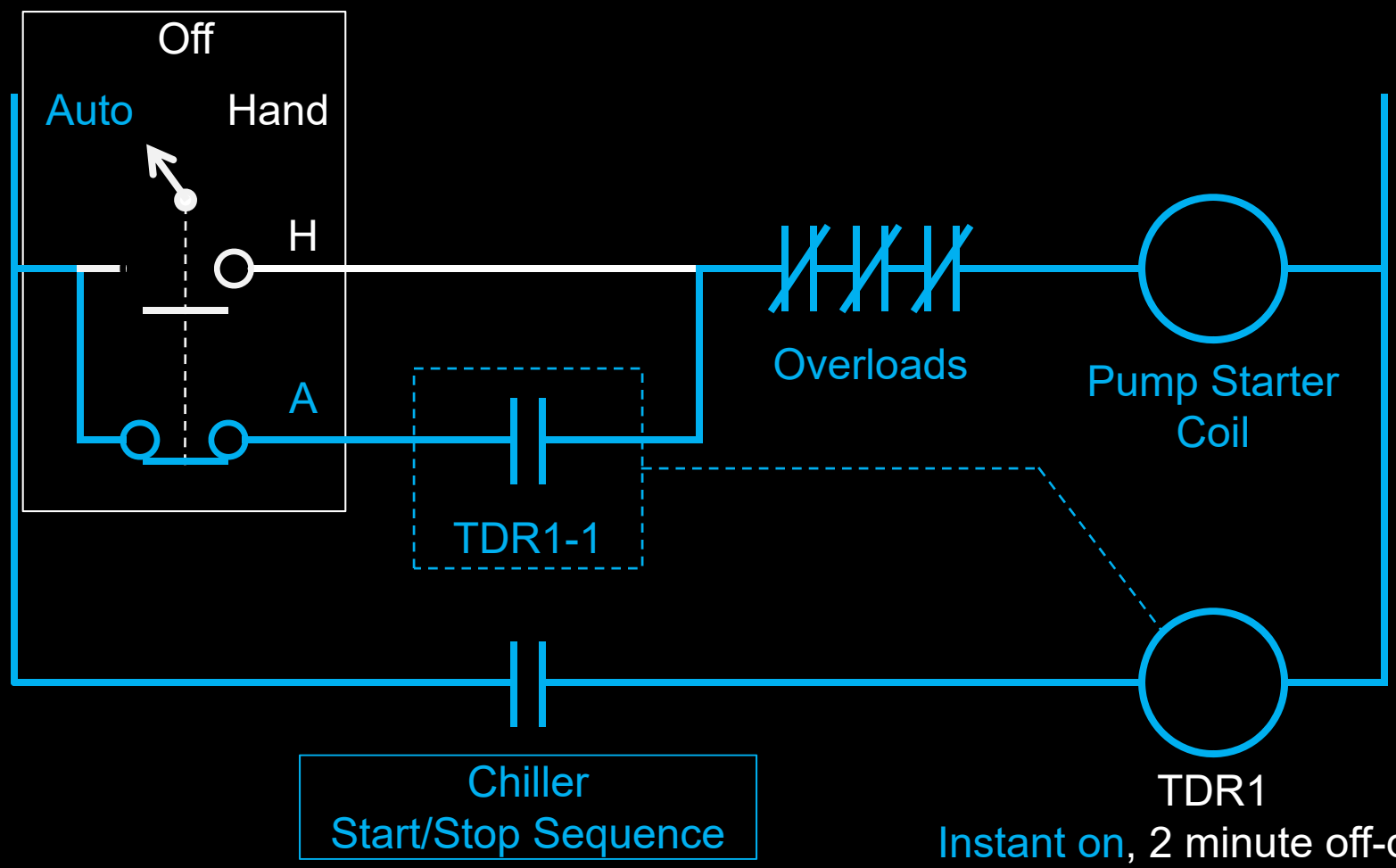

Controlling an Evaporator Pump with Relay Logic

Design Intent: In "Auto", start the pump when required by the chiller start sequence. Keep it running for 2 minutes after the chiller shuts down.

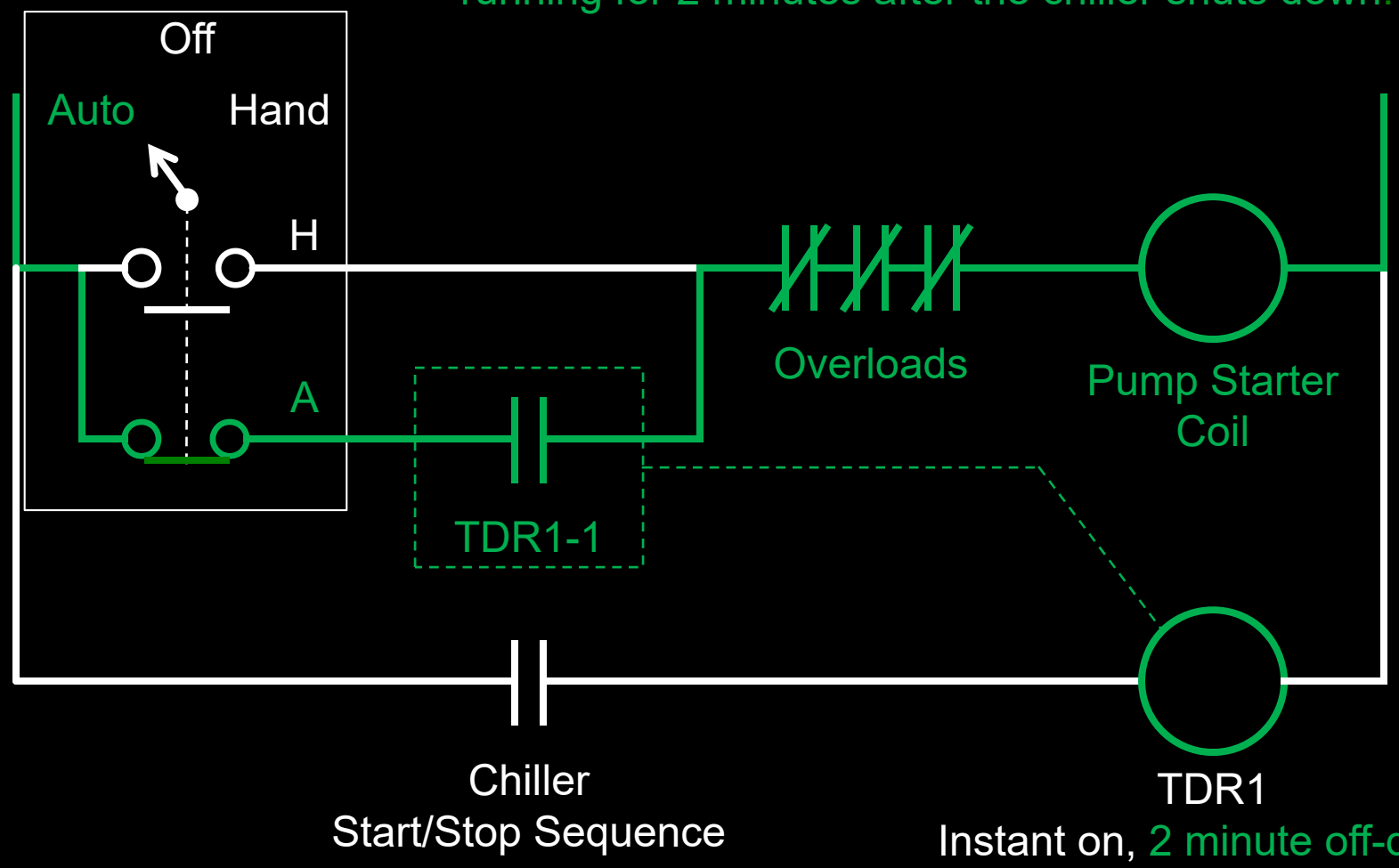

Controlling an Evaporator Pump with Relay Logic

Design Intent: In "Auto", start the pump when required by the chiller start sequence. Keep it running for 2 minutes after the chiller shuts down. Run the pump continuously in "Hand".

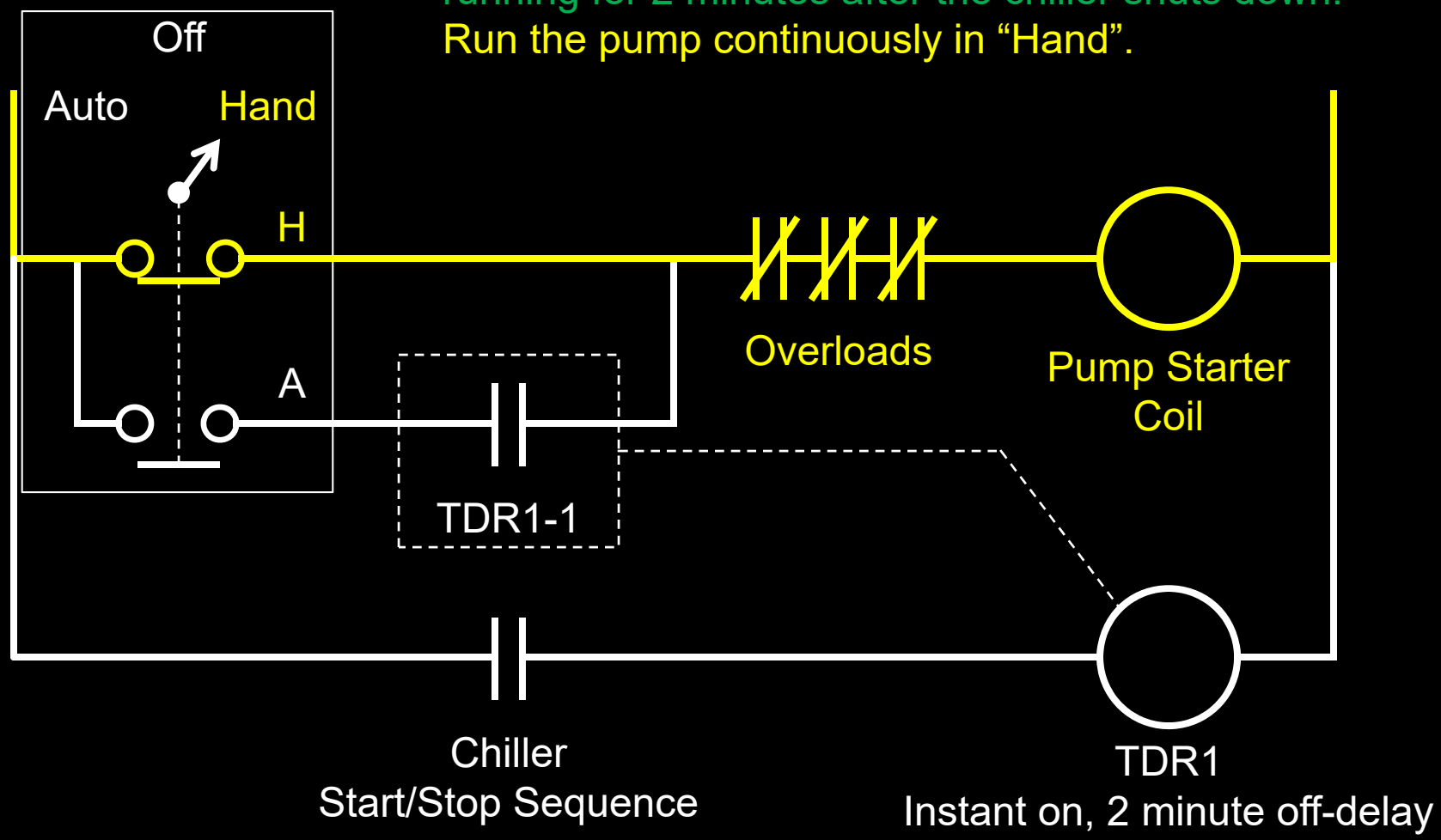

Controlling an Evaporator Pump with Relay Logic

Design Intent: In "Auto", start the pump when required by the chiller start sequence. Keep it running for 2 minutes after the chiller shuts down. Run the pump continuously in "Hand". Overloads shut down the pump no matter what.

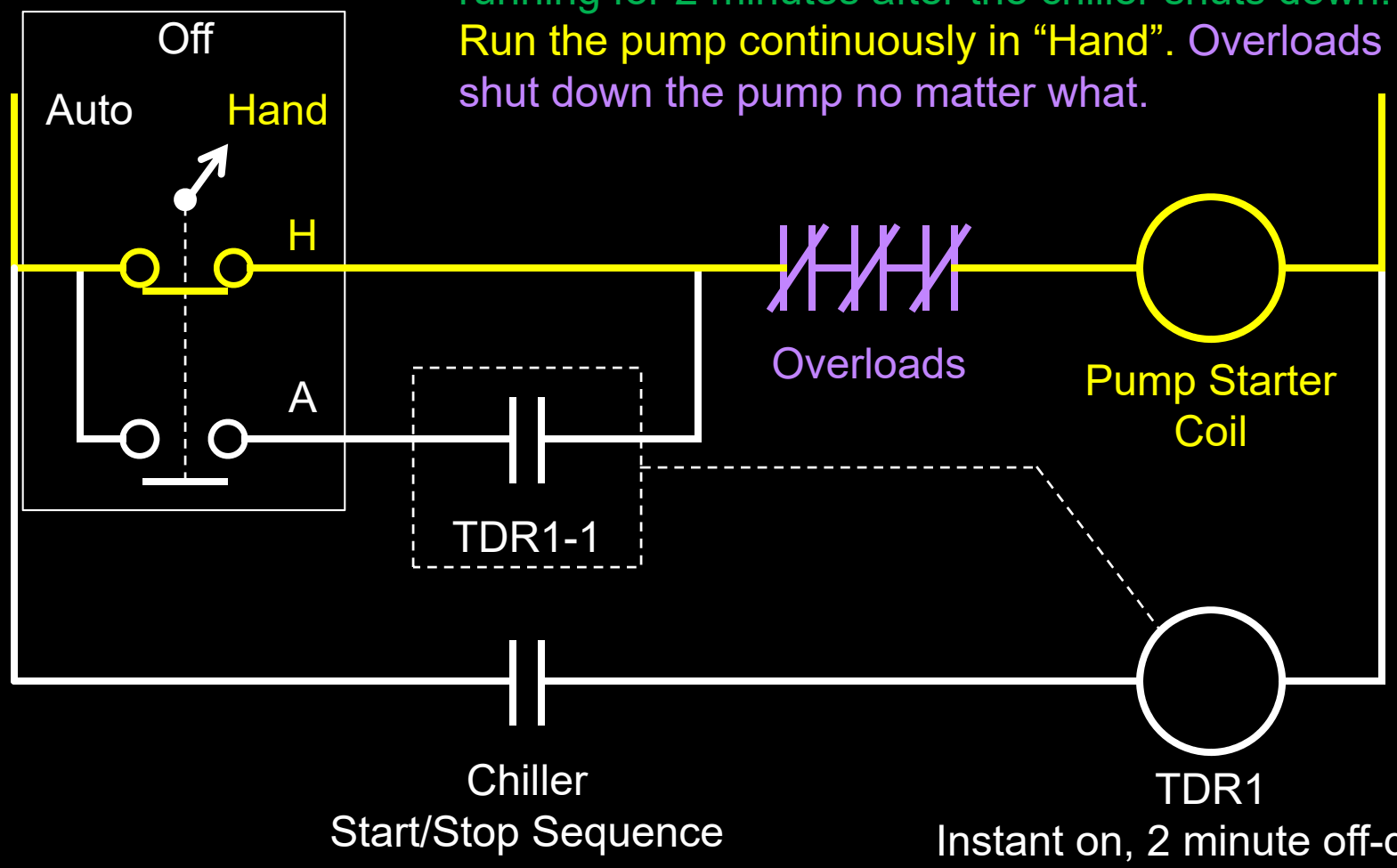

Control Systems: Design, Performance and Commissioning Issues

Control Process Logic

DCC Logic

Instructor:

David Sellers

Senior Engineer

Facility Dynamics Engineering

October 23, 2017

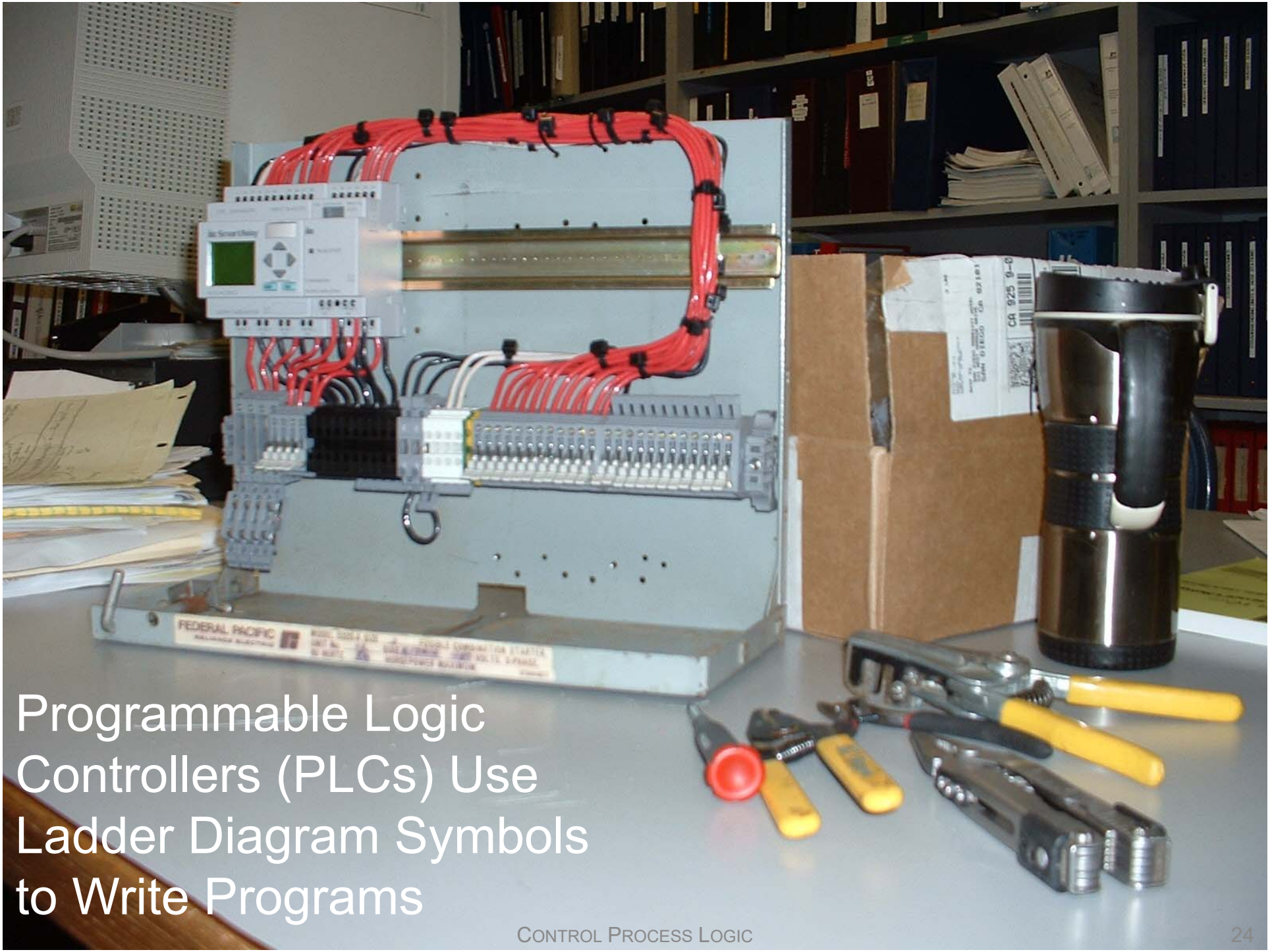

Programmable Logic Controllers (PLCs) Use Ladder Diagram Symbols to Write Programs

IDEC SmartRelay Program Controlling a Water Feature

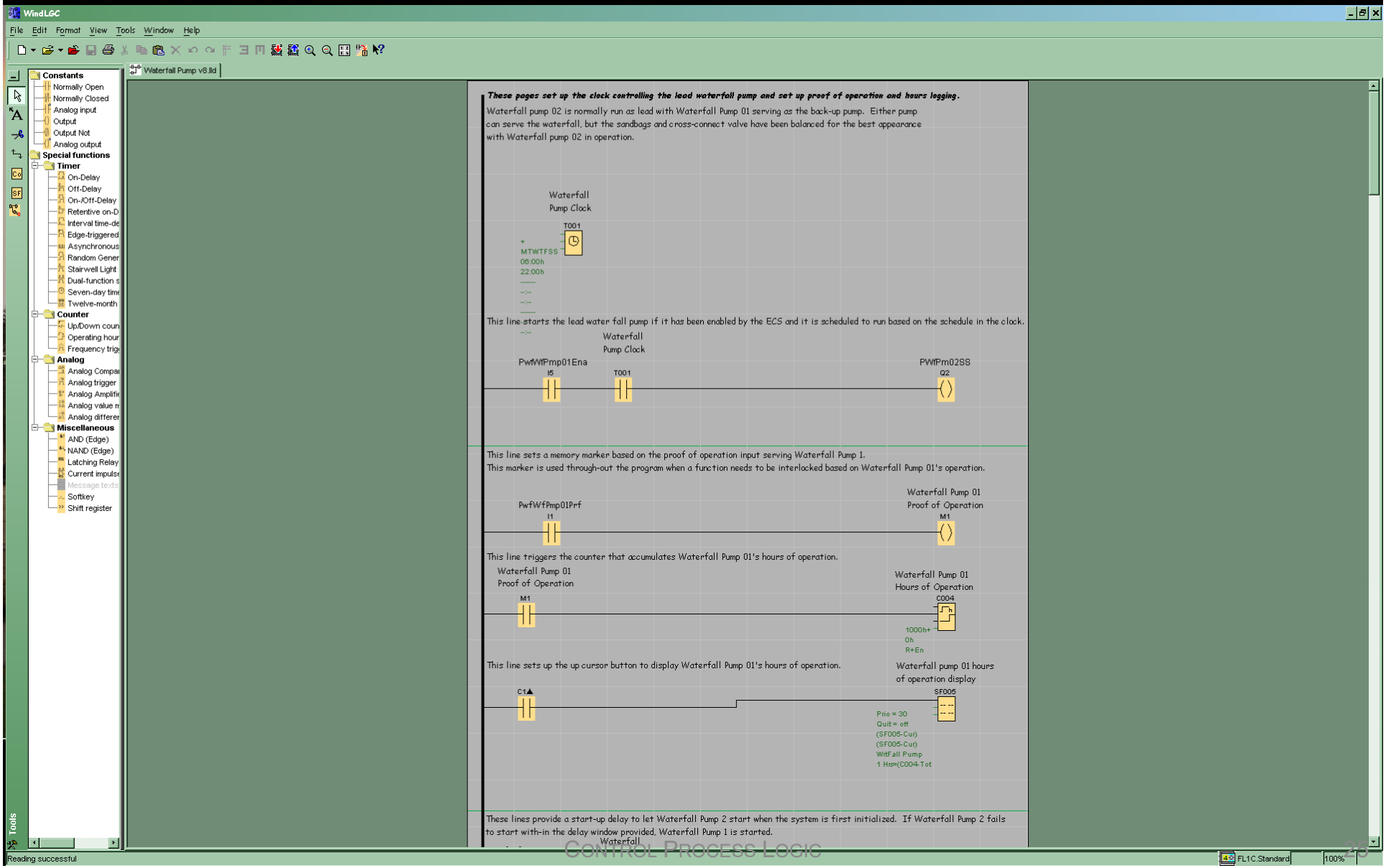

IDEC SmartRelay Program Controlling a Water Feature

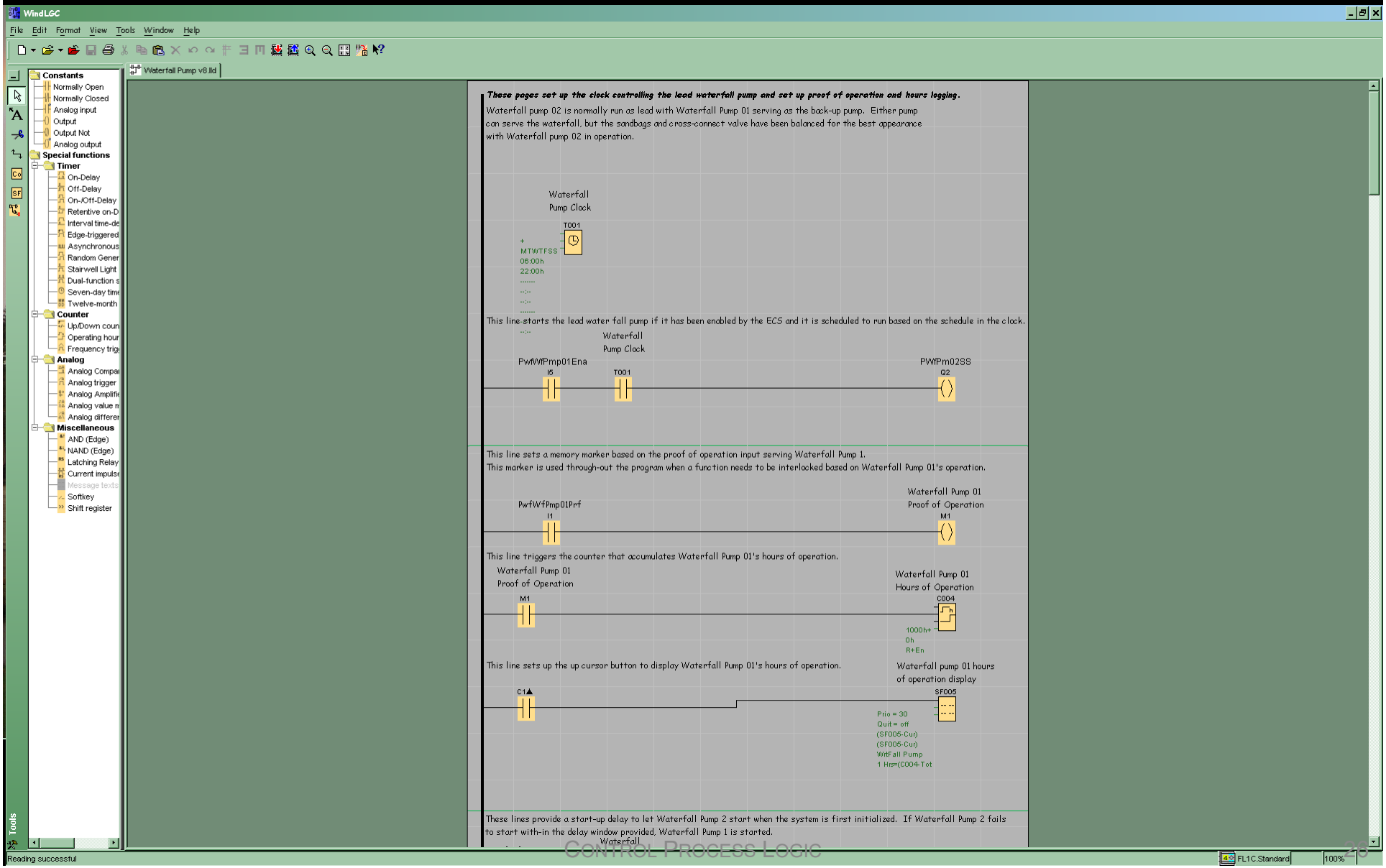

Controlling an Evaporator Pump with DDC Logic

In current technology DDC systems, computer logic has taken over much of the automation and timing.

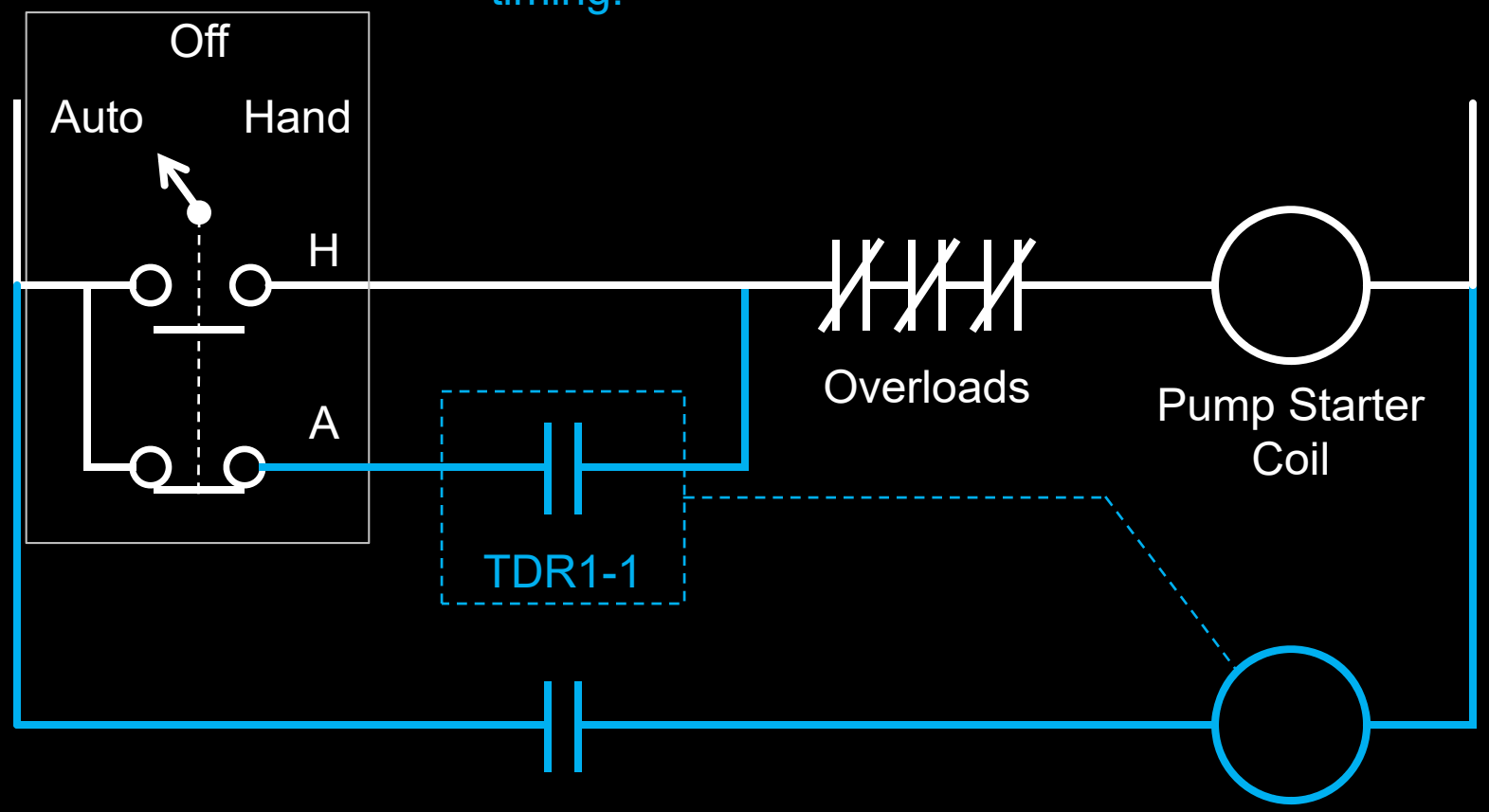

Controlling an Evaporator Pump with DDC Logic

In current technology DDC systems, computer logic has taken over much of the automation and timing.

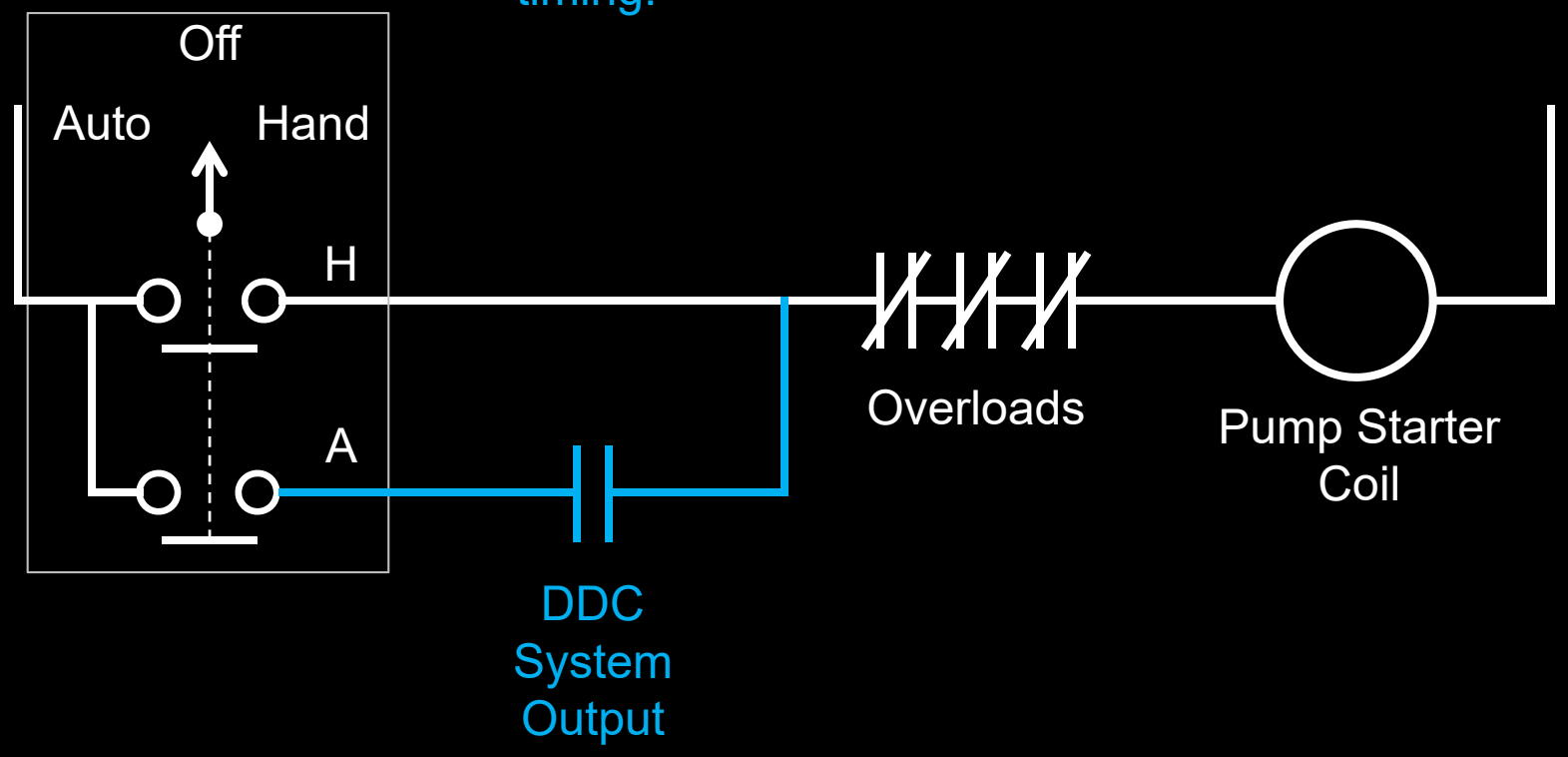

Controlling an Evaporator Pump with DDC Logic

In current technology DDC systems, computer logic has taken over much of the automation and timing.

Hardwired interlocks are still used to provide safety and fail-safe functions.

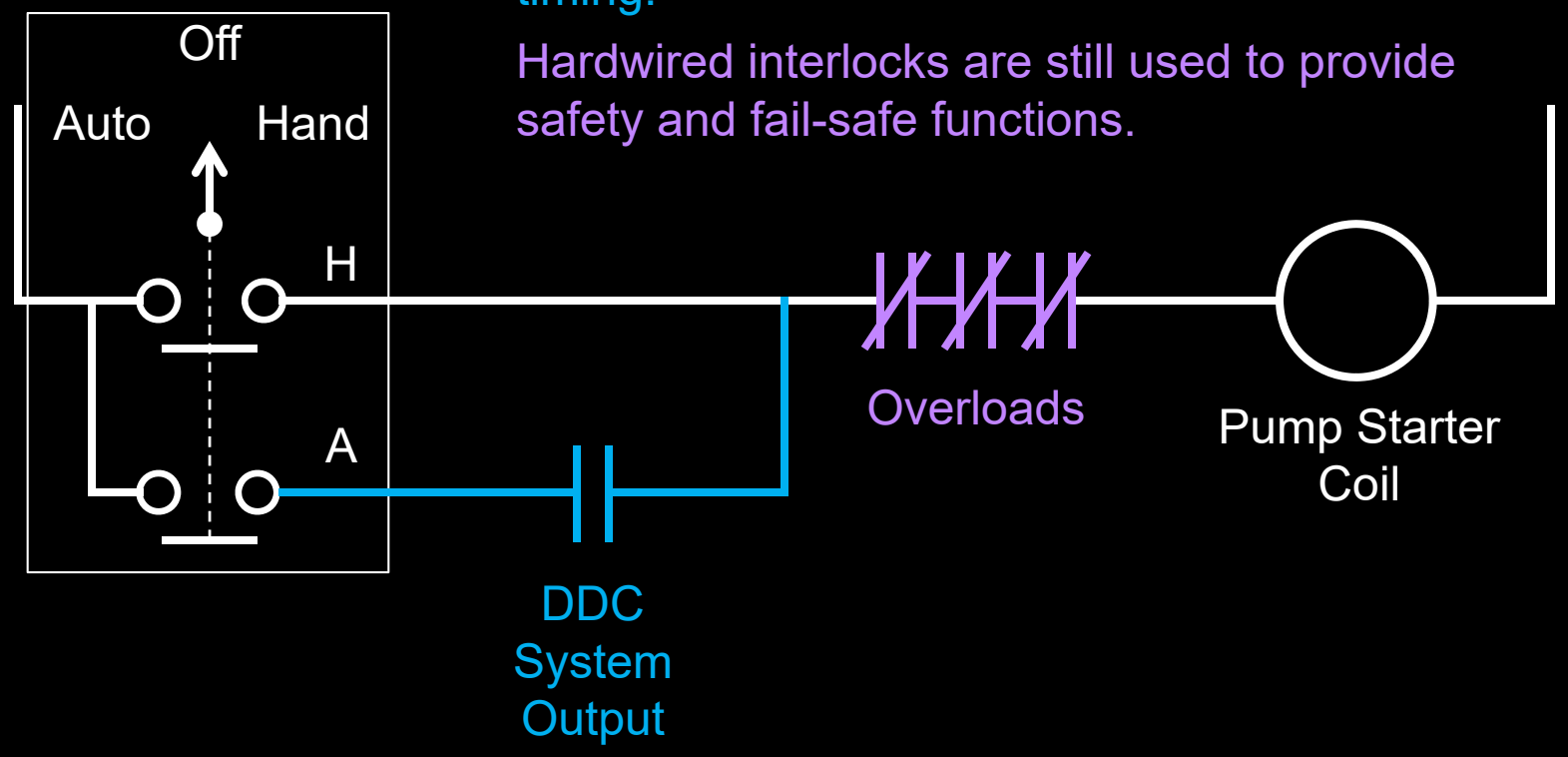

Control Systems: Design, Performance and Commissioning Issues

Control Process Logic

Defining DDC Logic with Flow Charts and Logic Diagrams

Instructor:

David Sellers

Senior Engineer

Facility Dynamics Engineering

October 23, 2017

Logic Physically Defined by Wires and Devices Pre-DDC Still Needs to be Defined for DDC

- As early as 1968, standards were developed for documenting computer logic using flow charts (ANSI X3.5 – 1968)
- Current version – ANSI – AIIM – 4 – 1987
- Microsoft Office has standard shapes built in to the drawing tools drop down menu

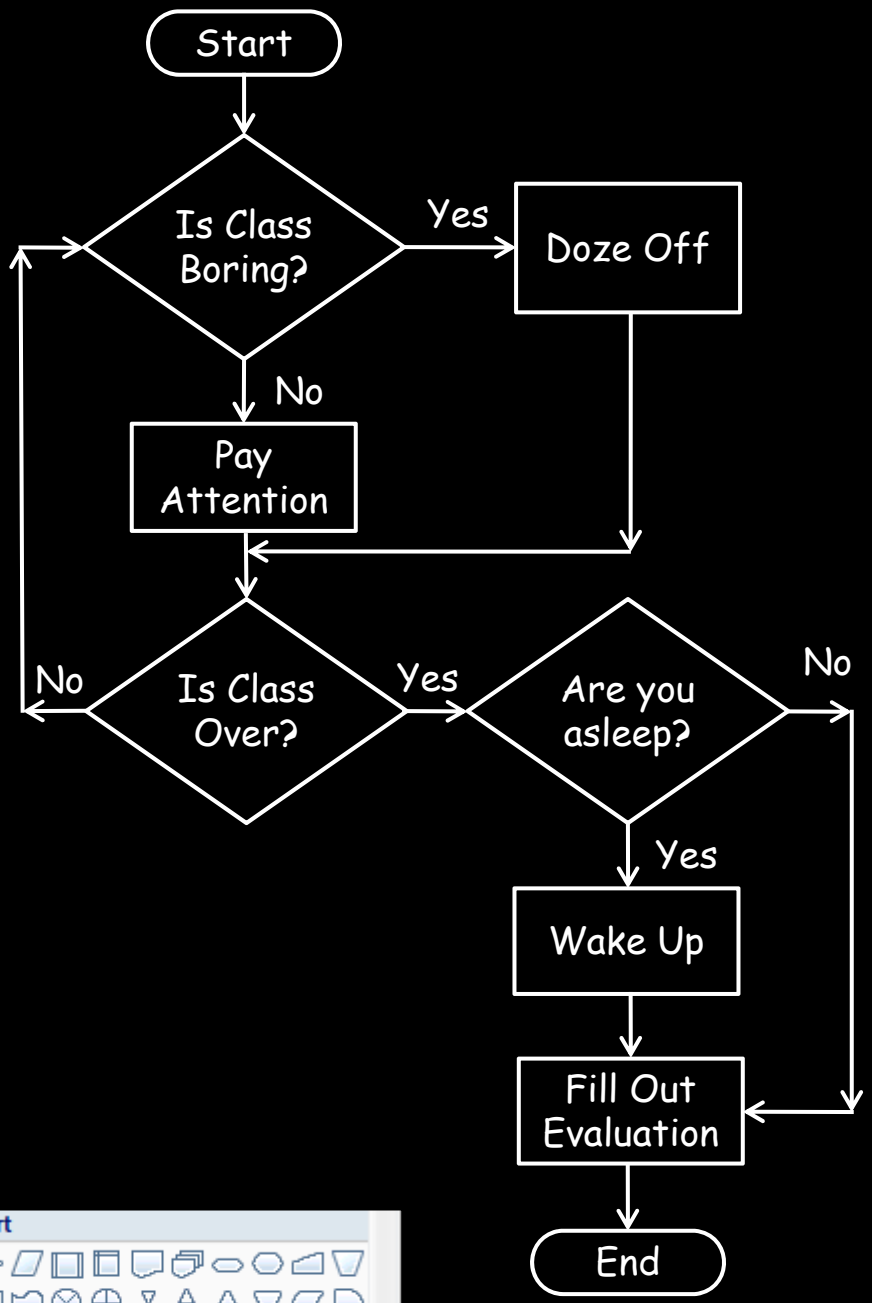

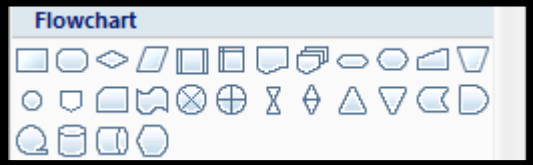

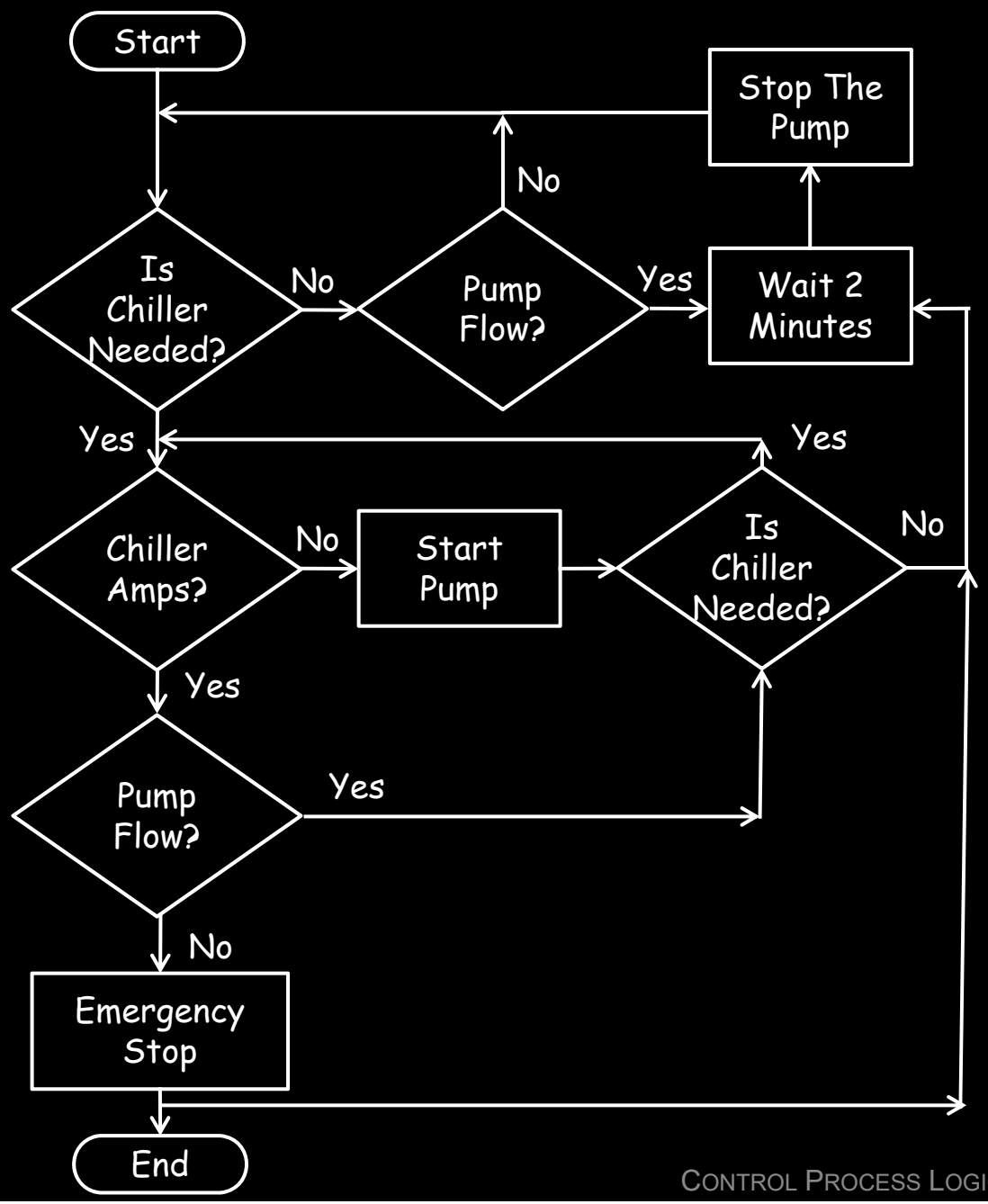

Flow Chart for DDC Logic to Control the Chilled Water Pump Automation

Facility Dynamics

ENGINEERING

Control Processes

Comparing Relay Logic to DDC Logic

www.FacilityDynamics.com

Comparing DDC Logic to Relay Logic

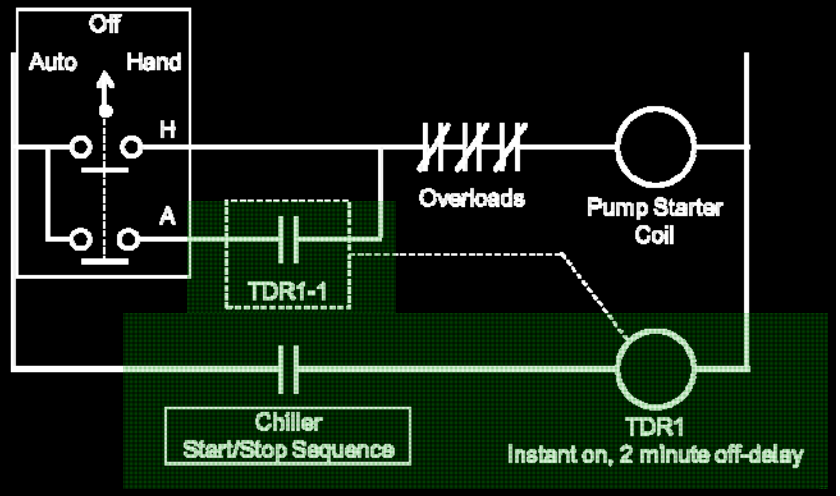

The areas shaded in green are the functions in the relay logic circuit that will be provided by the DDC system

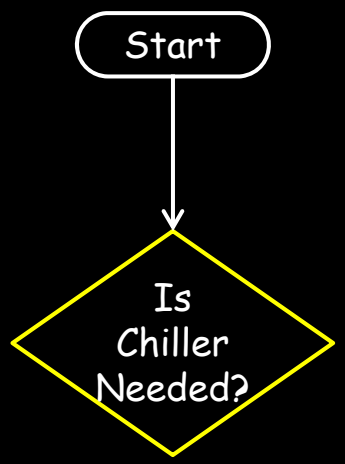
Start
Is Chiller Needed?

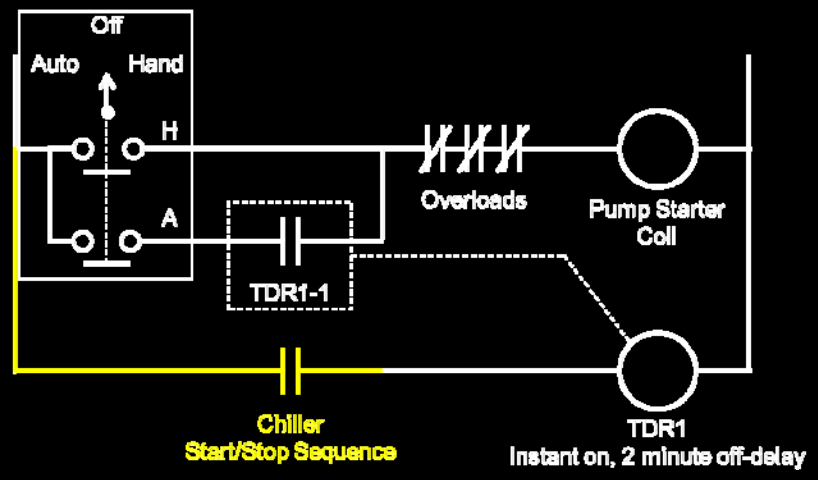
Off
Auto
Hand
H
A
TDR1-1
Overloads
Pump Starter Coil
Chiller Start/Stop Sequence
TDR1
Instant on, 2 minute off-delay

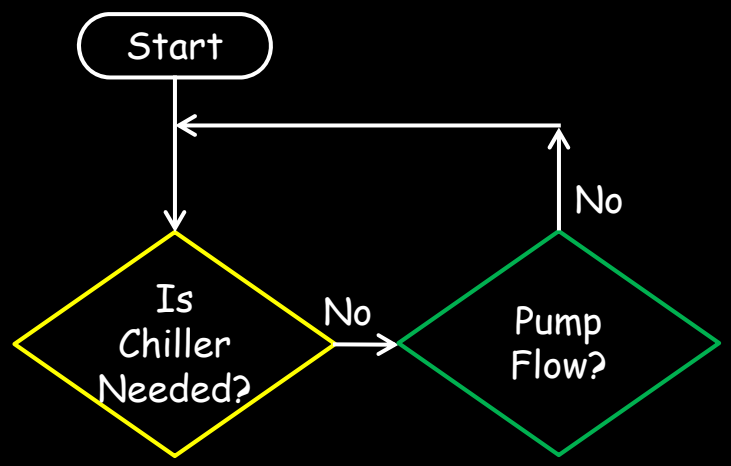

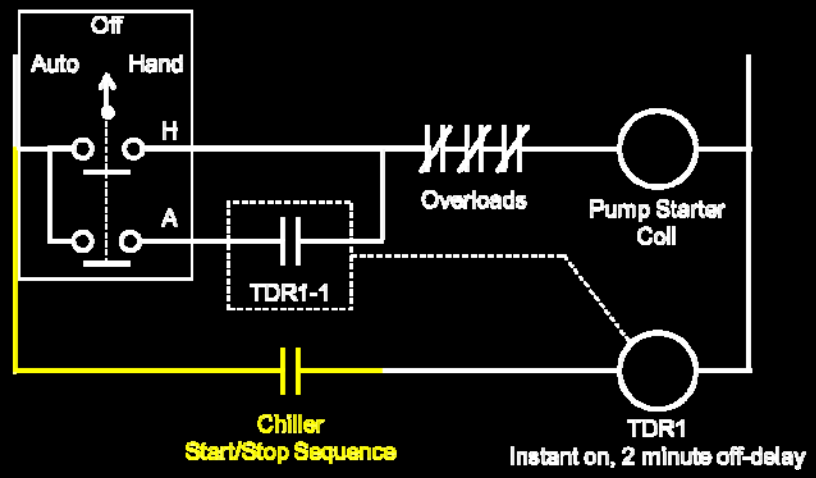

Note that the logic could assume the pump is running if it is needed and the *On Command* has been issued,

But a more positive proof would be to check to see if the pump was drawing current or if a flow switch in the pipe it served was closed.

Either of these options would require a physical input of some sort which is not shown in the diagram above.

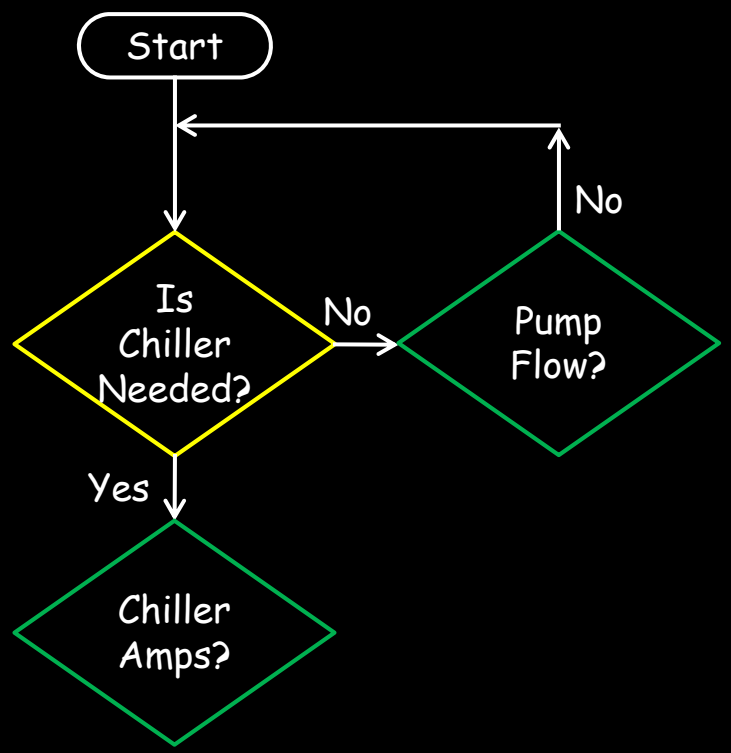

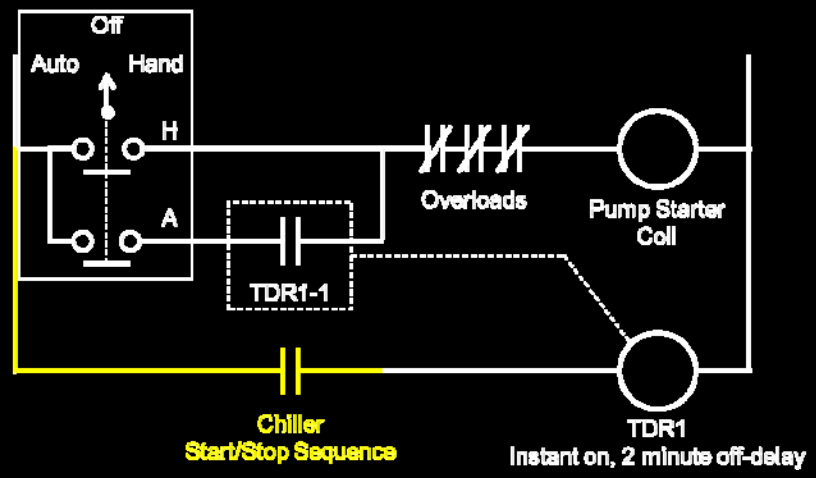

Similar to the preceding, the logic could assume that the chiller was running if a start command had been issued previously.

But chiller amps will provide a more positive proof of chiller operation that would not be “fooled” for instance by an internal safety shutting down the chiller.

If a safety had shut down the chiller and the logic assumed it was running because you had commanded it on, you would not know there was a problem.

In contrast, loss of amps with an On command would indicate a problem of some sort

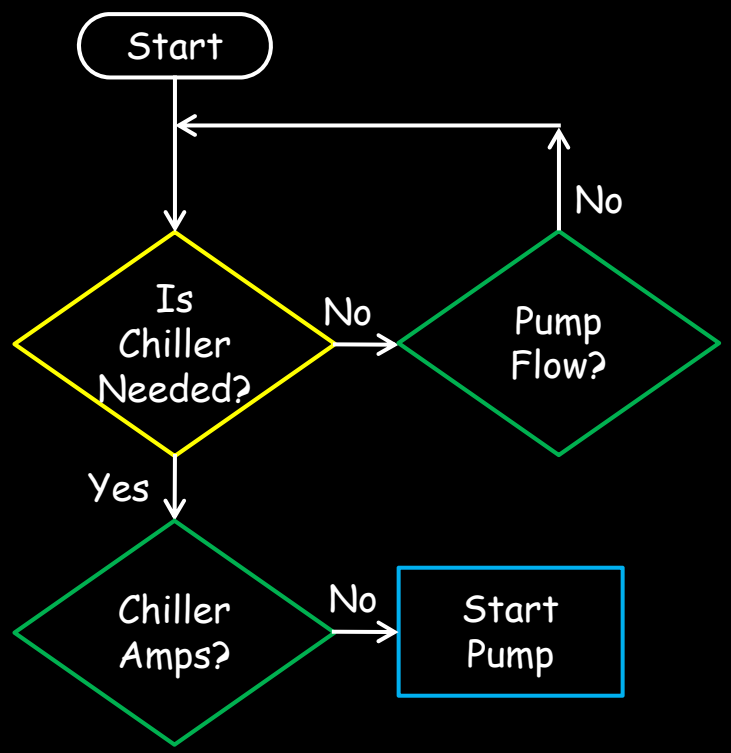
Start
No
Is Chiller Needed?
No
Pump Flow?
Yes
Chiller Amps?
No
Start Pump

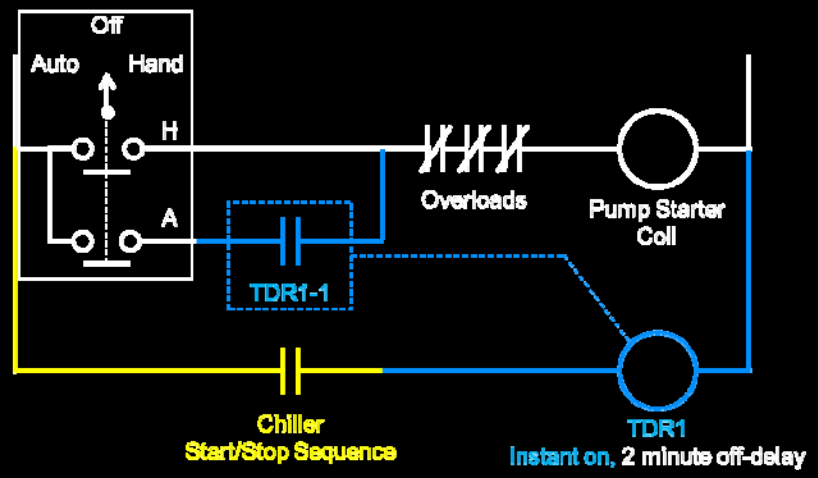
Off
Auto
Hand
H
A
Overloads
Pump Starter Coil
TDR1-1
Chiller Start/Stop Sequence
TDR1
Instant on, 2 minute off-delay

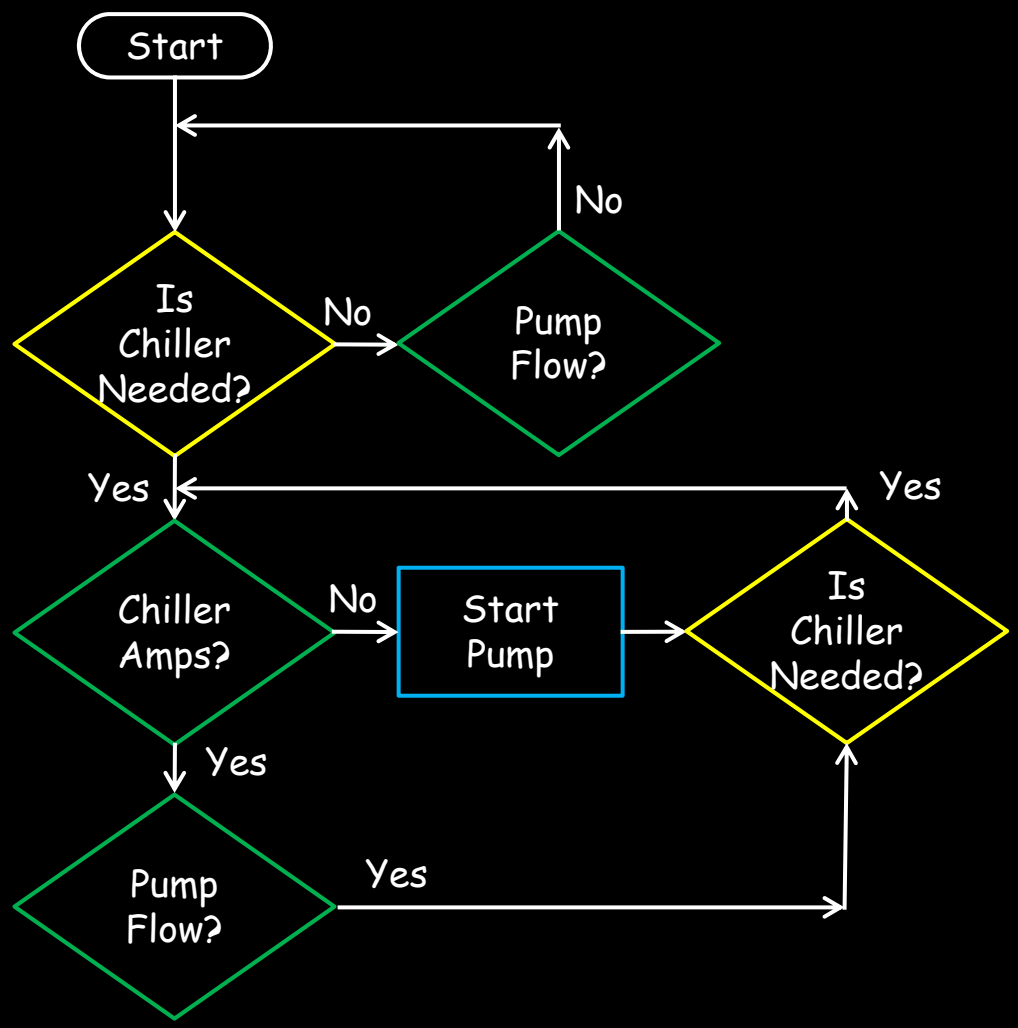
Start
No
Is Chiller Needed?
No
Pump Flow?
Yes
Yes
Chiller Amps?
No
Start Pump
Is Chiller Needed?
Yes
Pump Flow?
Yes

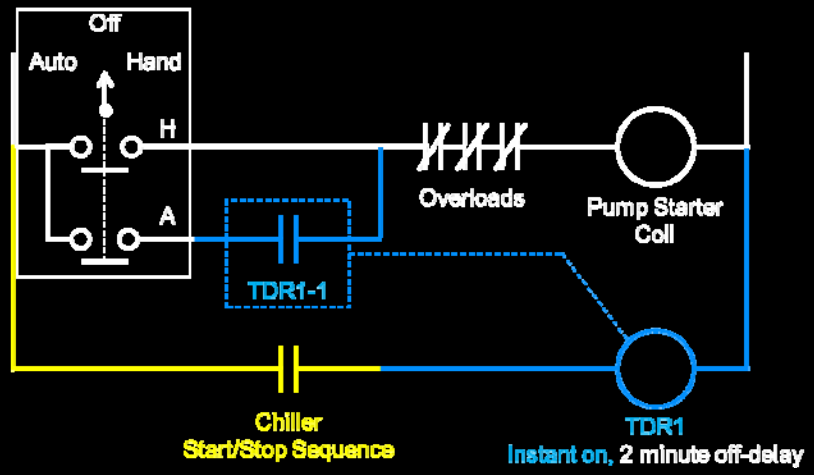
Off
Auto
Hand
H
A
Overloads
Pump Starter Coil
TDR1-1
Chiller Start/Stop Sequence
TDR1
Instant on, 2 minute off-delay

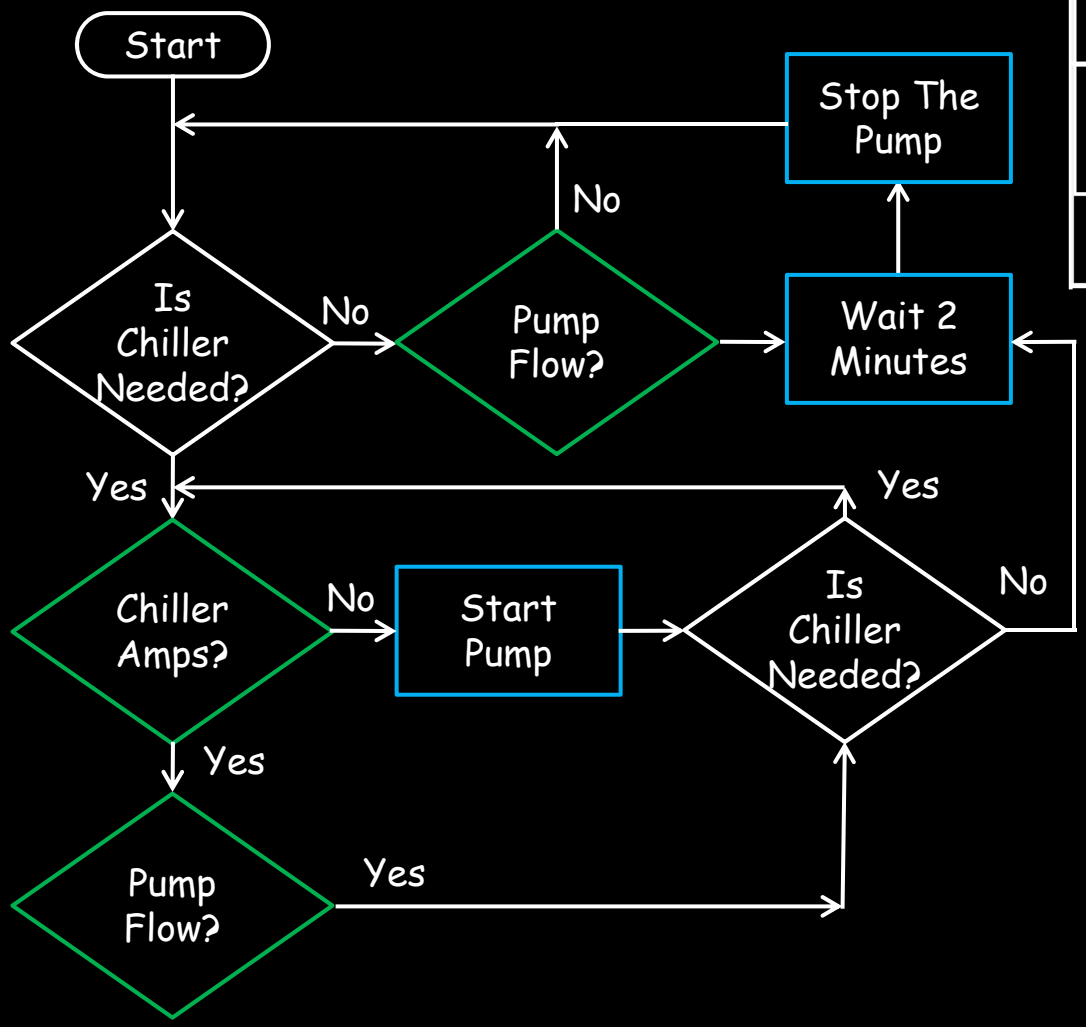
Start
Stop The Pump
No
Is Chiller Needed?
No
Pump Flow?
Wait 2 Minutes
Yes
Yes
Chiller Amps?
No
Start Pump
Is Chiller Needed?
No
Yes
Pump Flow?
Yes

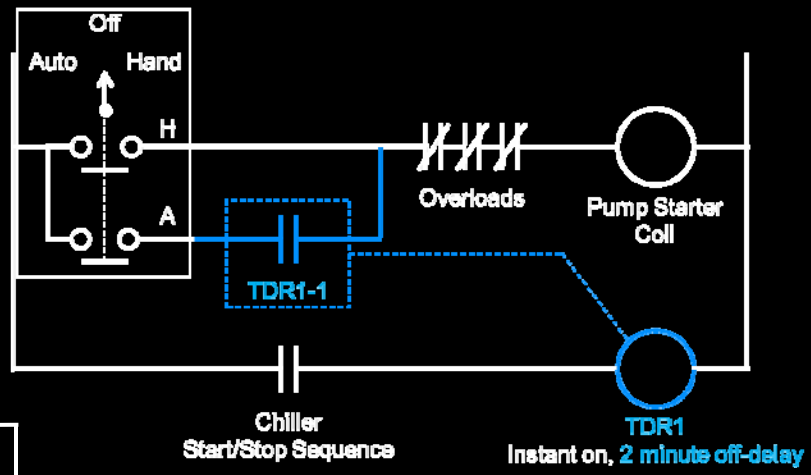
Off
Auto
Hand
H
A
Overloads
Pump Starter Coil
TDR1-1
Chiller Start/Stop Sequence
TDR1
Instant on, 2 minute off-delay

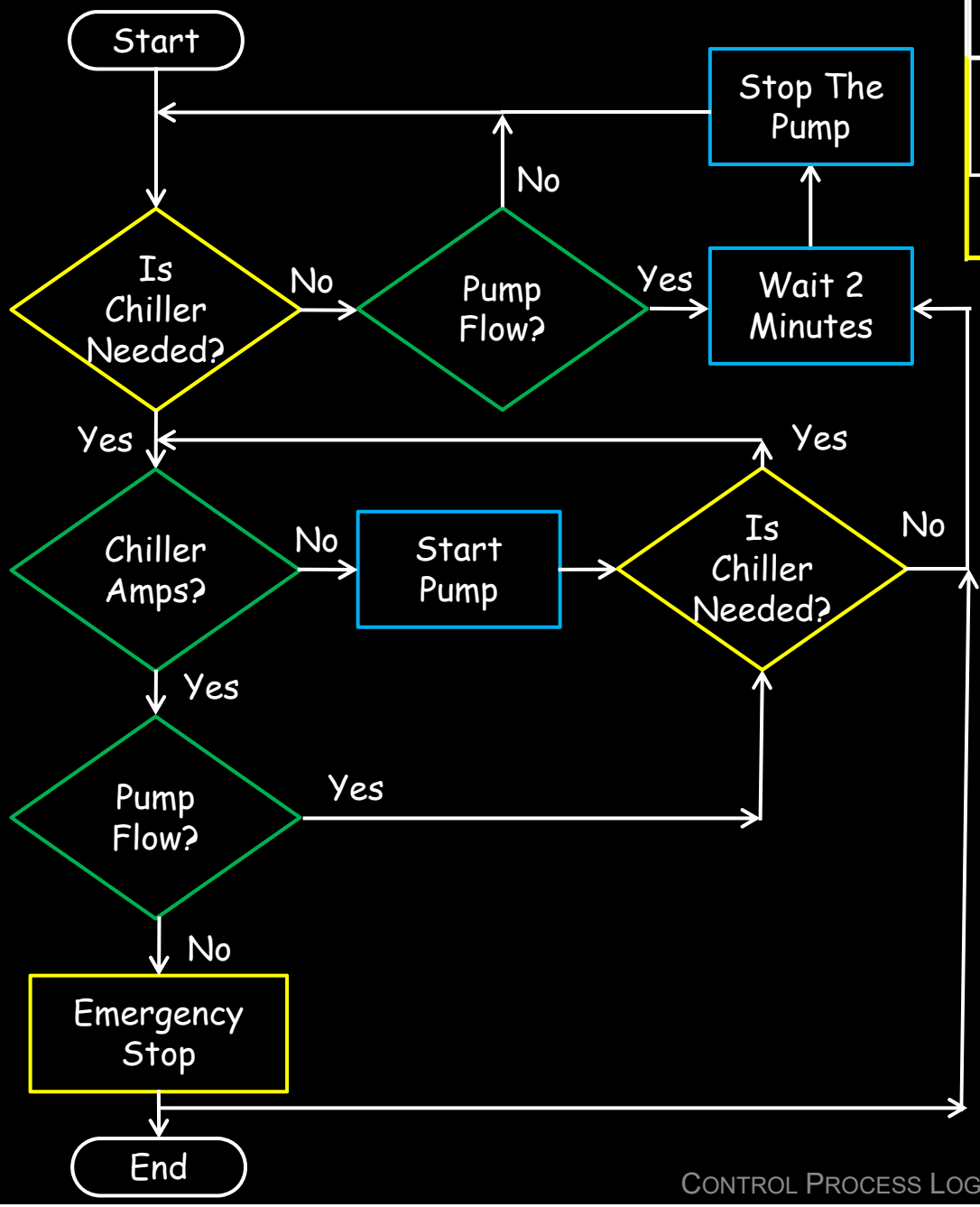
Start
Stop The Pump
No
Is Chiller Needed?
No
Pump Flow?
Yes
Wait 2 Minutes
Yes
Yes
Chiller Amps?
No
Start Pump
Is Chiller Needed?
No
Yes
Pump Flow?
Yes
No
Emergency Stop
End

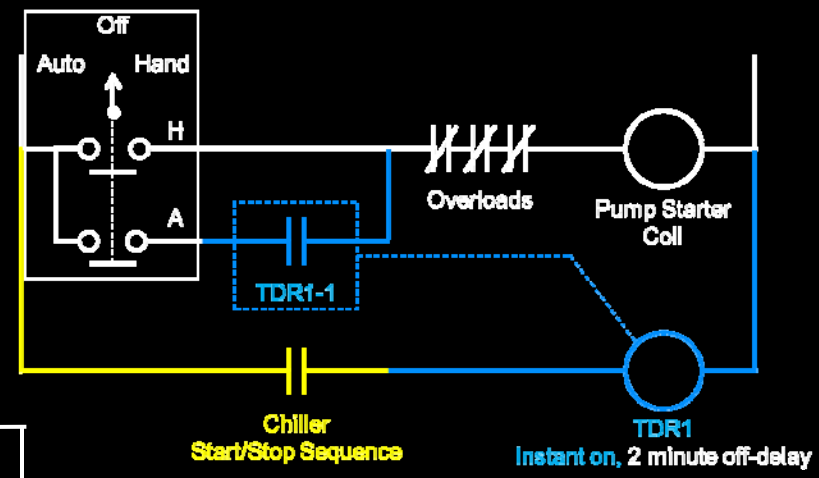
Off
Auto
Hand
H
A
Overloads
Pump Starter Coil
TDR1-1
Chiller Start/Stop Sequence
TDR1
Instant on, 2 minute off-delay

Everything Inside the Black Box is Digital

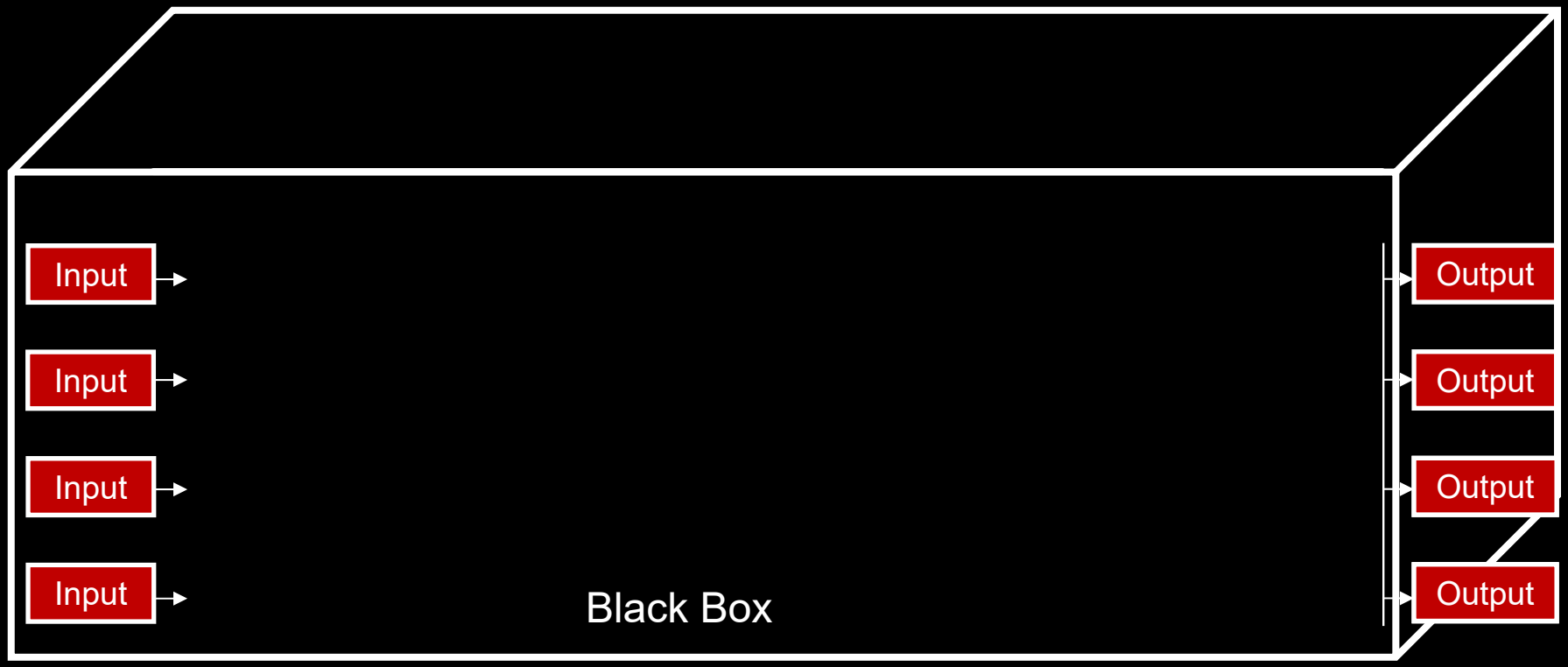

Everything Outside the Black Box is Analog

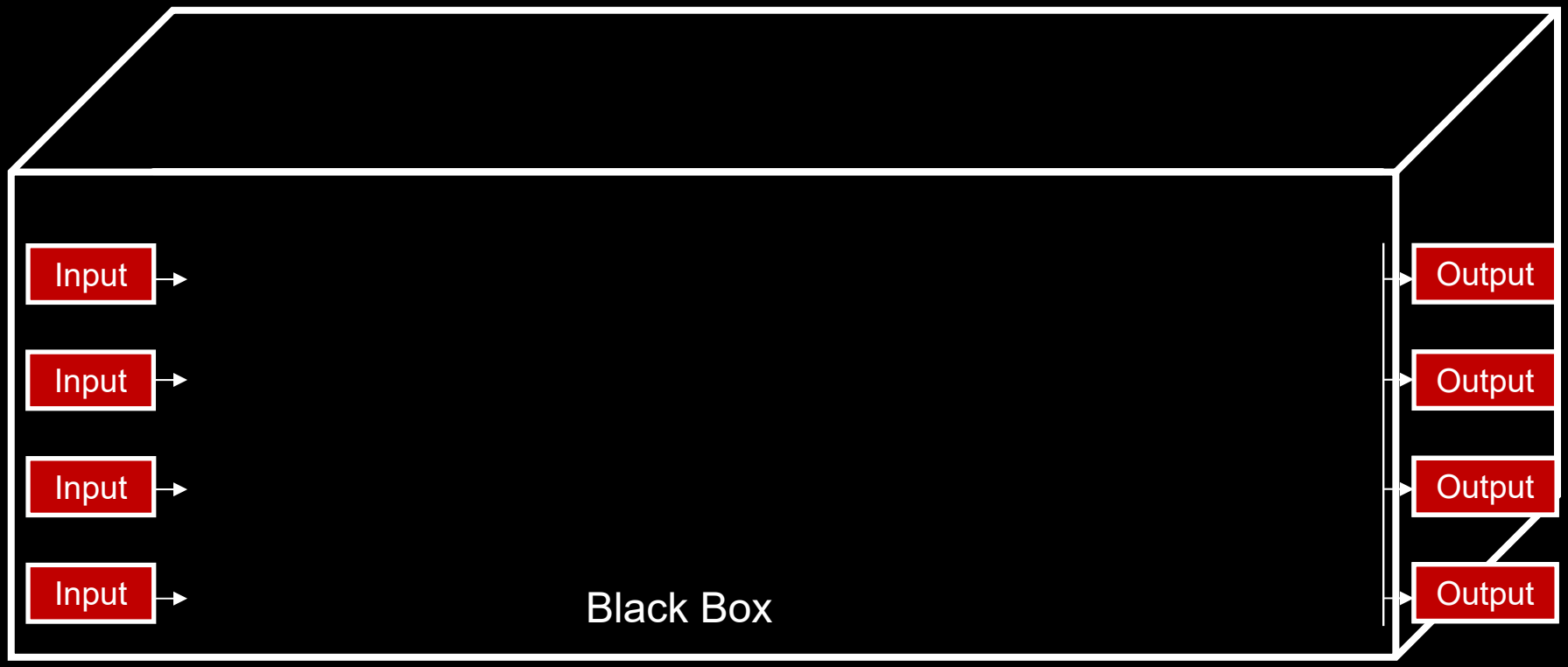

A Digital View of an Analog World

Apply Digital Technology to Interface with Analog Information to Control Analog Systems by Imitating Analog Control Processes Using Digital Algorithms

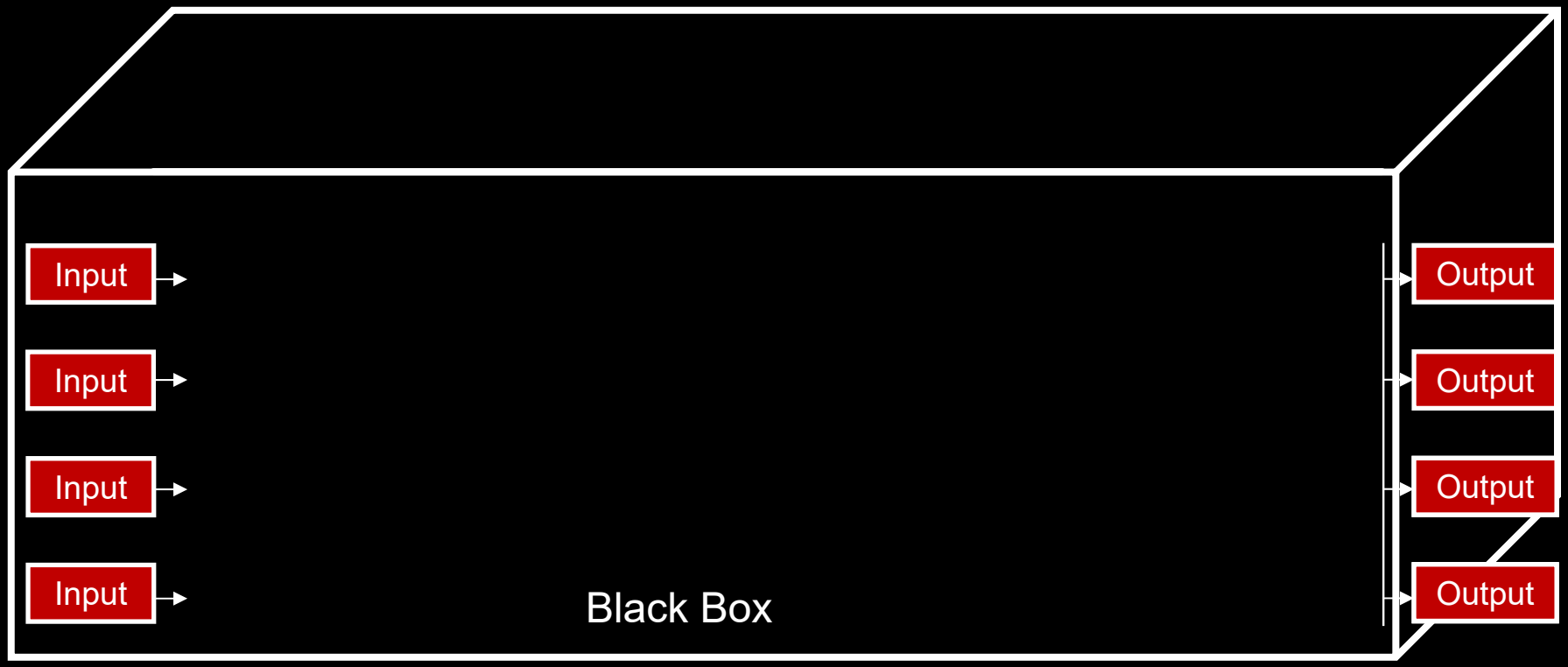

Two General Approaches Used for Developing Control Logic

Line Code

```
  3280  C
  3300  C      IF THE LOW TEMP DETECTOR IS ACTIVATED THE PROGRAM WILL
       +COMMAND
  3320  C      AN IMMEDIATE SHUTDOWN OF THE AHU. AN OPERATOR MUST MANUALLY
       +RESET
  3340  C      THE LOW TEMP DETECTOR AND COMMAND POINT "A4LTLO" OFF TO
       +RESTART
  3360  C      THE FAN SYSTEM.
  3380  C
E 3400  IF (A4LTDE .EQ. ON ) THEN ON (A4LTLO)
E 3420  IF (A4LTLO .EQ. ON ) THEN GOTO 12980
  3440  C
  3460  C      IF THE DISCHARGE AIR STATIC PRESSURE EXCEEDS ITS HIGH LIMIT
       +PRESSURE
  3480  C      THE PROGRAM WILL COMMAND AN IMMEDIATE SHUTDOWN OF THE AHU. AN
       +
  3500  C      OPERATOR MUST COMMAND POINT "A4HPLO"  OFF TO RESTART THE FAN.
  3520  C
E 3540  IF (AH4FPR .GT. 5.0) THEN ON (A4HPLO)
E 3560  IF (A4HPLO .EQ. ON ) THEN GOTO 12980
  3580  C
  3600  C      IF THE RETURN AIR STATIC PRESSURE EXCEEDS -2 INCHES SUCTION
       +PRESS.
  3620  C      ON EITHER A OR B FAN, THE PROGRAM WILL COMMAND AN IMMEDIATE
       +SHUTDOWN
  3640  C      OF THE AHU.  AN OPERATOR MUST COMMAND POINT "A4RPLO" OFF TO
  3660  C      RESTART THE FAN.
  3680  C
E 3700  IF (A4ARFP .GT. 2.0 .OR. A4BRFP .GT. 2.0) THEN ON (A4RPLO)
E 3720  IF (A4RPLO .EQ. ON ) THEN GOTO 12980
  3740  C
  3760  C      IF THE AHU IS RUNNING NORMALLY AND ANY ISOLATION DAMPER
       +INDICATES
  3780  C      THE DAMPER IS CLOSING, THE AHU WILL IMMEDIATLY SHUTDOWN. AN
  3800  C      OPERATOR MUST COMMAND POINT "A4IDLO" OFF TO RESTART THE FAN.
  3820  C
E 3840  IF (AS4ASS .EQ. OFF ) THEN GOTO 3880
E 3860  IF (A4RADS .EQ. OFF .OR. A4SADS .EQ. OFF ) THEN ON (A4IDLO)
E 3880  IF (AS4BSS .EQ. OFF ) THEN GOTO 3920
E 3900  IF (A4RBDS .EQ. OFF .OR. A4SBDS .EQ. OFF ) THEN ON (A4IDLO)
E 3920  IF (A4IDLO .EQ. ON ) THEN GOTO 12980
  3940  C
  3960  C      IF BOTH A AND B FANS ARE COMMANDED TO OPERATE AND EITHER A OR
       +B
  3980  C      FAN IS COMMANDED TO OPERATE INDEPENDANTLY, GOTO THE SHUTDOWN
       +SEQ.
  4000  C
E 4020  IF (A4ABON .EQ. ON .AND. A4AFON .EQ. ON ) THEN GOTO 12980
E 4040  IF (A4ABON .EQ. ON .AND. A4BFON .EQ. ON ) THEN GOTO 12980
  4060  C
  4080  C      ***********************************************************
```

Graphic Programming

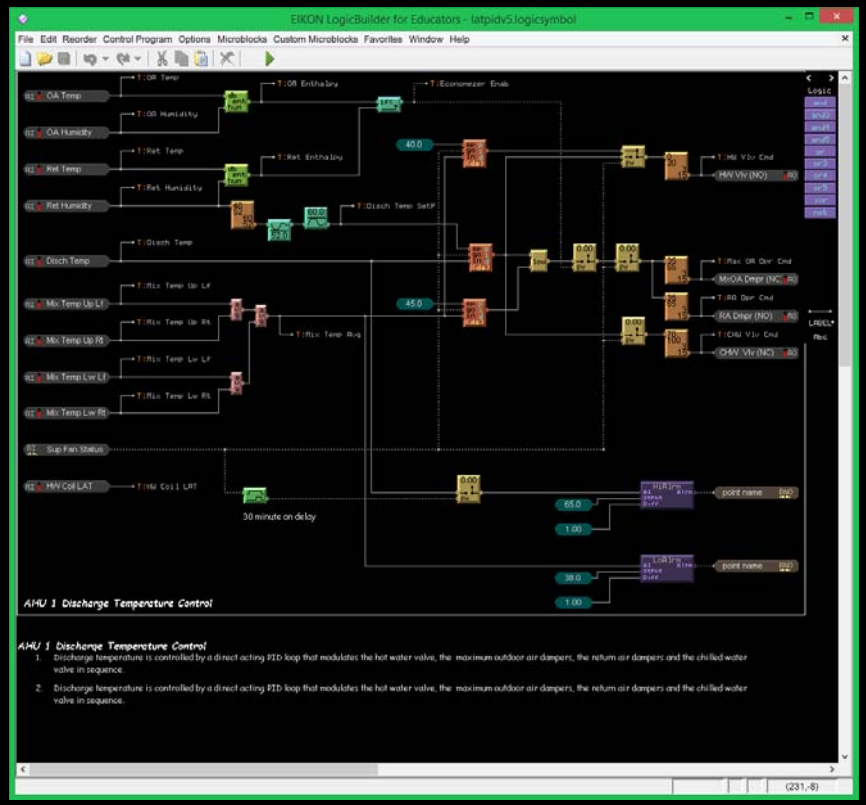

Two General Approaches Used for Developing Control Logic

Line Code

```
  3280  C
  3300  C      IF THE LOW TEMP DETECTOR IS ACTIVATED THE PROGRAM WILL
       +COMMAND
  3320  C      AN IMMEDIATE SHUTDOWN OF THE AHU. AN OPERATOR MUST MANUALLY
       +RESET
  3340  C      THE LOW TEMP DETECTOR AND COMMAND POINT "A4LTLO" OFF TO
       +RESTART
  3360  C      THE FAN SYSTEM.
  3380  C
E 3400  IF (A4LTDE .EQ. ON ) THEN ON (A4LTLO)
E 3420  IF (A4LTLO .EQ. ON ) THEN GOTO 12980
  3440  C
  3460  C      IF THE DISCHARGE AIR STATIC PRESSURE EXCEEDS ITS HIGH LIMIT
       +PRESSURE
  3480  C      THE PROGRAM WILL COMMAND AN IMMEDIATE SHUTDOWN OF THE AHU. AN
       +
  3500  C      OPERATOR MUST COMMAND POINT "A4HPLO"  OFF TO RESTART THE FAN.
  3520  C
E 3540  IF (AH4FPR .GT. 5.0) THEN ON (A4HPLO)
E 3560  IF (A4HPLO .EQ. ON ) THEN GOTO 12980
  3580  C
  3600  C      IF THE RETURN AIR STATIC PRESSURE EXCEEDS -2 INCHES SUCTION
       +PRESS.
  3620  C      ON EITHER A OR B FAN, THE PROGRAM WILL COMMAND AN IMMEDIATE
       +SHUTDOWN
  3640  C      OF THE AHU.  AN OPERATOR MUST COMMAND POINT "A4RPLO" OFF TO
  3660  C      RESTART THE FAN.
  3680  C
E 3700  IF (A4ARFP .GT. 2.0 .OR. A4BRFP .GT. 2.0) THEN ON (A4RPLO)
E 3720  IF (A4RPLO .EQ. ON ) THEN GOTO 12980
  3740  C
  3760  C      IF THE AHU IS RUNNING NORMALLY AND ANY ISOLATION DAMPER
       +INDICATES
  3780  C      THE DAMPER IS CLOSING, THE AHU WILL IMMEDIATLY SHUTDOWN. AN
  3800  C      OPERATOR MUST COMMAND POINT "A4IDLO" OFF TO RESTART THE FAN.
  3820  C
E 3840  IF (AS4ASS .EQ. OFF ) THEN GOTO 3880
E 3860  IF (A4RADS .EQ. OFF .OR. A4SADS .EQ. OFF ) THEN ON (A4IDLO)
E 3880  IF (AS4BSS .EQ. OFF ) THEN GOTO 3920
E 3900  IF (A4RBDS .EQ. OFF .OR. A4SBDS .EQ. OFF ) THEN ON (A4IDLO)
E 3920  IF (A4IDLO .EQ. ON ) THEN GOTO 12980
  3940  C
  3960  C      IF BOTH A AND B FANS ARE COMMANDED TO OPERATE AND EITHER A OR
       +B
  3980  C      FAN IS COMMANDED TO OPERATE INDEPENDANTLY, GOTO THE SHUTDOWN
       +SEQ.
  4000  C
E 4020  IF (A4ABON .EQ. ON .AND. A4AFON .EQ. ON ) THEN GOTO 12980
E 4040  IF (A4ABON .EQ. ON .AND. A4BFON .EQ. ON ) THEN GOTO 12980
  4060  C
  4080  C      ********************************************************
```

- Similar to other programming languages like Fortran, Pascal, C+, etc.
- Many commands similar to standard languages, like “If-Then-Else”, “Go To”, etc.
- Vendors have specialized commands like “Loop”, “Min”,”Lookup” etc. that are control process related

Two General Approaches Used for Developing Control Logic

- Preferred by some (especially older types) since the program looks very similar to a pneumatic control drawing
- If you could “look inside” the programing elements, you would discover they are driven by languages like C+, etc.
- If you prefer one approach over the other, it will narrow your choices for a control system vendor

Graphic Programming

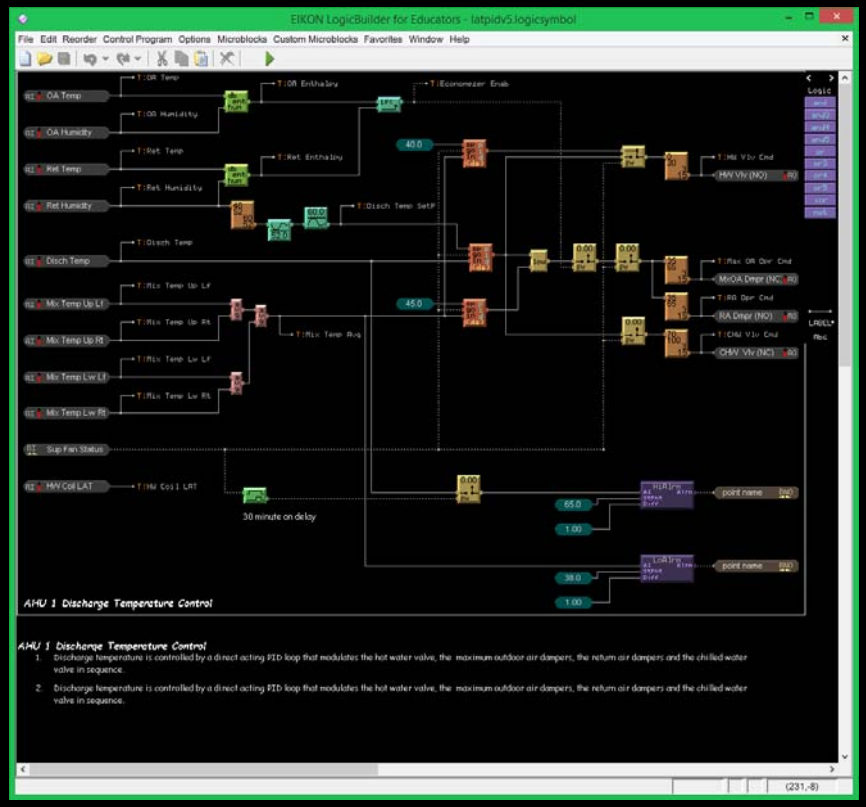

Jay Santos's 8 Steps for Developing Control Logic

1. Identify the devices to be controlled in the system (a.k.a. the *controlled variable*)
2. Figure out what you have to do to control each device
3. Figure out what you need to monitor to let you control each device (a.k.a. the *process variable*)
4. Figure out how to make the process variable interact appropriately with the controlled variable
5. Figure out what other things (secondary control processes) impact the primary control process for each device
6. Figure out how to monitor the secondary control processes and integrate them with the primary control process
7. Figure out if there are any limiting conditions that apply to the control process
8. Write it all down

Consider Writing it All Down in the Form of a Logic Diagram

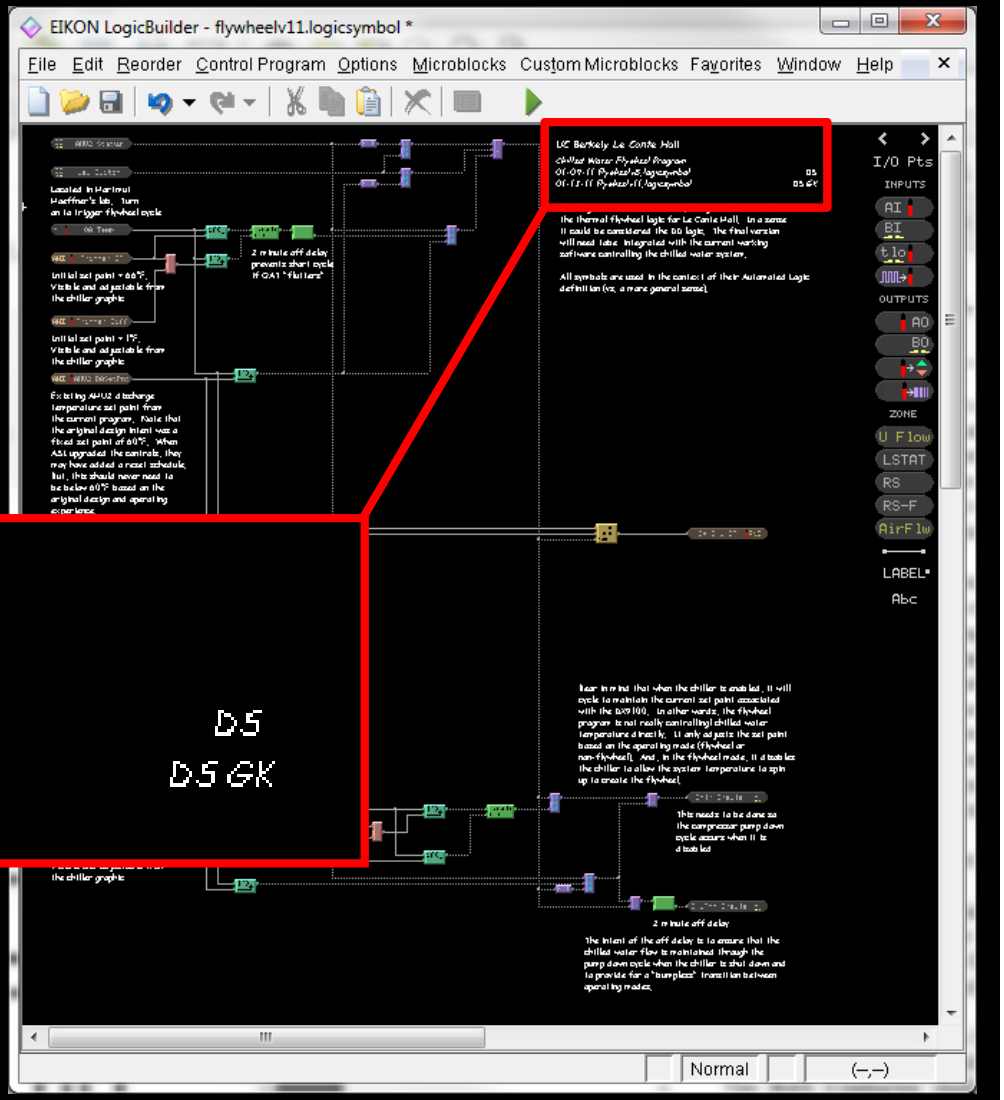

UC Berkely Le Conte Hall

Chilled Water Flywheel Program

01-09-11 flywheelv8.logicsymbol D5

01-13-11 flywheelv11.logicsymbol D5 GK

Consider Writing it All Down in the Form of a Logic Diagram

- As early as 1968, standards were developed for documenting computer logic using flow charts (ANSI X3.5 – 1968)
- In 1974, functional testing demonstrated this was a good idea (also demonstrated that a flow chart in reverse is a trouble shooting diagram)
- Current version – ANSI – AIIM – 4 – 1987
- Microsoft Office has standard shapes built in to the drawing tools drop down menu

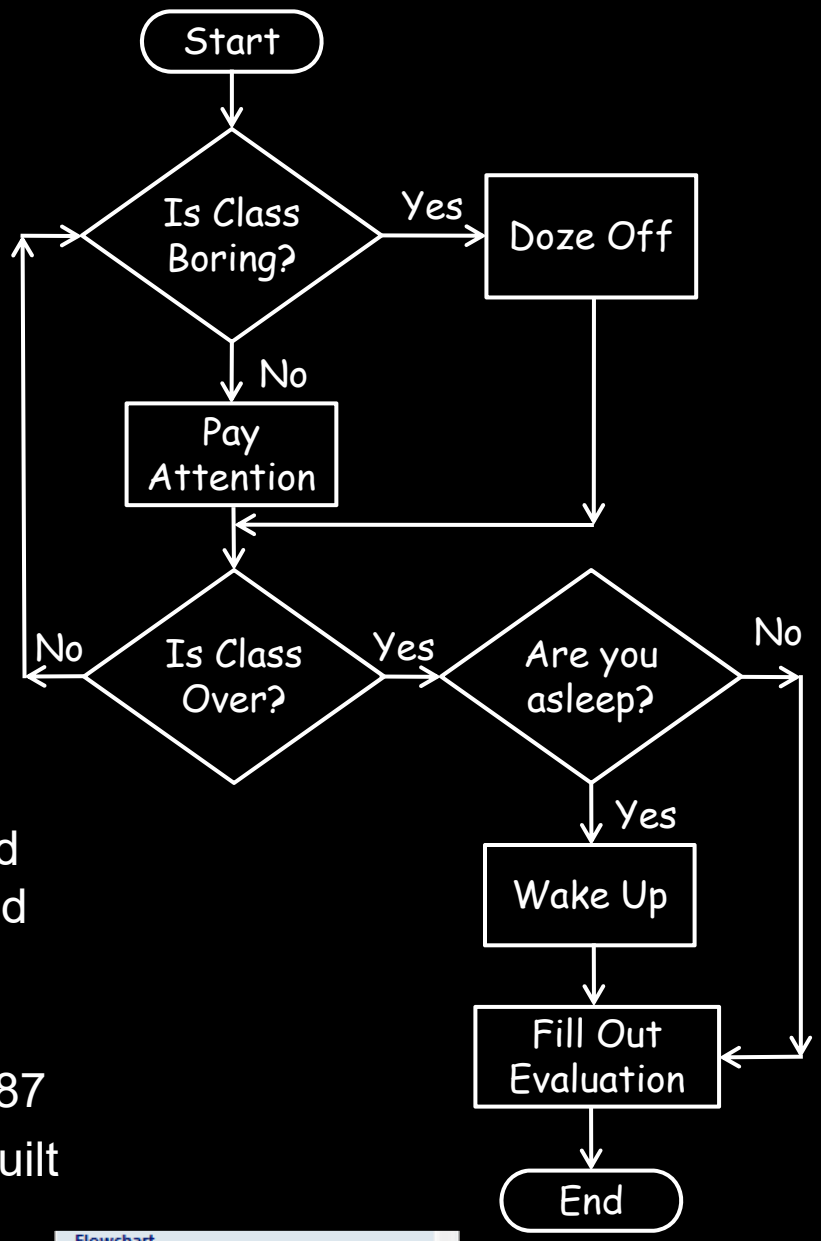

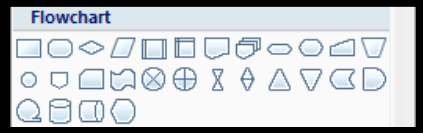

A Picture's Worth a Thousand Words

(And also Thousands of Dollars)

UCB SOO 4-26-2010

BAA UC SOO Air Balance Guide Line Converting from CFM to Pressurization Control.

A. Assumptions used in the UCB SOO Matrix

1. Room differential transmitter(s) need to be added to the two GAS BUNKERS to give room DP control to exhaust fans ((EF-3&4). Coordinate with Mark Lesko about how and where sensors to be located to provide the GAS BUNKER DP control for both GAS BUNKERS. It may be necessary to use one GAS BUNKER DP to control the DP and flows to both GAS BUNKERS.

2. The Air Balance Report published leakage air flows test that measured the air leakage from the FAB L3M & L5 along the measured FAB room differential pressure. These two values were used to calculate the FAB crack area. This FAB crack area was used with an equation that uses the room crack area and desired room differential pressure to calculate the amount of air flow required to maintain a specific room differential pressure.

3. This equation was used to approximate the FAB and GAS BUNKER resulting room differential pressures that could be expected by setting a constant exhaust flow from exhaust fans(EF-1 & 2) and use the equation to approximate the required air flow from the make-up air handlers(AHU-1A & 1B) and the required exhaust flow from exhaust fans(EF-3 & 4) needed to generate desirable room differential pressures in the FAB and Gas Bunker.

4. A differential pressure of ±0.01 "W.C equates to about 1 lb/sq.ft on a door. Design objective try and keep a person from being exposed to a door opening force in excess of 15 lbs force(about a differential pressure of ±0.15"W.C for a standard door).

5. A normal 20 sq.ft door can be expected to provide at least a 6 lb force against a negative room pressure of –0.04"W.C. Most standard door closures start to have resistance to that may be increased or decreased at the time of balance if undesirable exhaust and make-up air flow result from the DPs.

6. The FAB L3M & L5 are both about (14,480 sq.ft say 15,000 sq.ft). The design ventilation rate for this area is 4 cfm/sq.ft. This equates to about a combined 60,000 cfm air flow for exhaust fans(EF-1 & 2).

7. The GAS BUNKERS for L3M & L5 are both about (561 sq.ft say 600 sq.ft). The two rooms set-up to give a low flow warning at 10 cfm/sq.ft and a tool gas shutdown at 7 cfm/sq.ft.

8. Air flow goal for the GAS BUNKERS is to prevent pyrophoric gases exfiltrating out of the GAS BUNKERS into the FAB and to provide acceptable ventilation rates. This means that exhaust fans(EF-3 & 4) have to run at a speed signal high enough to maintain a negative pressure in the GAS BUNKERS working against the make-up and exhaust air flows contributed to the GAS BUNKERS from air handlers(AHU-1A & 1B) and exhaust fans(EF-1 & 2) and maintain a ventilation air flow rate in the GAS BUNKER above 10 cfm/sq.ft (close to 16 cfm/sq.ft if possible) without generating a door opening force in excess of 15 lbs.

9. The FAB make-up air handlers(AHU-1A & 1B) and the GAS BUNKER exhaust fans (EF-3 & 4) to have their control logic changed from controlling to a constant air flow value to controlled to maintain a room DP. This change in control philosophy means that the FAB and GAS BUNKER ventilation rates shall be determined by the exhaust fan(EF-1 & 2) fixed speed setting and the make-up air handlers(AHU-1A & 1B) and exhaust fans(EF-3 & 4) shall respond to the fixed exhaust fan(EF-1 & 2) flow rate to maintain a positive room DP in the FAB and a negative room DP in the GAS BUNKERS.

Comment [RJS1]: The only resulting exhaust airflow that could be controlled with the GAS BUNKER DP would be that of EF-3 & 4. If this value is modified to reflect room pressure, care must be taken that this value does not reduce the available exhaust at the pyrophoric gas cabinets below the "…200 FPM across all valves & fittings (Gas Cabinet Footprint, not window)…".

Additionally, the "Alarm Point" airflow documented in the TAB report is 17% of design (3"?) and 16% (5"?) of the airflow delivered at design operation. It is highly unlikely that the proportional balance of the AHU-1 system will persist across such a large operational range, making a DP control system important to maintain the Bunkers at an acceptable room pressure level.

Comment [RJS2]: To obtain the actual "Crack Area" or Bldg Envelope Cv would require that the actual airflows of AHU-1A & 1B, EF-1, 2 & 3 were measured concurrently with one another AND the Fab Pressure. It appears that these critical measurements were actually measured as follows:

AHU-1A&1B – Pre-Filter Traverses March 25, 09
AHU-1A&1B – RHC Traverses March 11, 09
EF-1 & 2 – Traverses February 25, 09
EF-1 & 2 – Gas Cabinets June 15, 09
EF-3 & 4 – Traverse March 9, 09
Room Pressure Testing May 15, 09

IES and RSA should collaborate to ensure the actual measurements contained in the TAB report can be used in the manner required.

Comment [RJS3]: Based on my experience (Far from Authoritative or compelling) these are reasonable values HOWEVER I have seen departures from these norms based on several factors (envelope leakage, door weight, door opening hardware, etc.) that can negate the most careful calculations. This makes the Airflow/Room Pressure relationship an extremely important value, imperative to be accurate (See previous note)

Comment [RJS4]: Because there is nothing to vary the flow of air from AHU-1A & 1B from one area to another, the key point of failure in the Bunkers will be the point at which the ratio of Exhaust/Supply changes. How far this area operates into this ratio in "Normal" mode (Room Pressure) may indicate that there isn't much play before the system(s) need to be shut down.

Comment [RJS5]: Will the EF's exhausting the GC's be operating to control room pressure at all times, even during "Normal" situations? This will be a little tricky as the GC's must be maintained correctly during normal operation regardless of the room pressure as mentioned in previous notes.

Also, is it possible that the minimum allowable exhaust airflow (200 FPM over the cabinet footprint) of the pyrophoric Gas Cabinets may be reached before the minimum ventilation rate is reached?

10. The values shown in SOO Matrix are estimated values for air flows resulting room DPs and are intended rough order of magnitude values to asset in giving the Air Balancer rough order of magnitude values that can be compared to actual values and act as a starting point to balance to FAB air flow and room DPs that shall maintain acceptable ventilation rates in the FAB and GAS BUNKERS without creating room DPs too high to impede personnel evacuation in the event of evacuation alarms.

11. (E) control interlocks, isolation damper positions, proof of flow minimum and maximum set-points for air handlers(AHU-1A & 1B) and exhaust fans(EF-1 thru 4) to remain as programmed for the (N) differential pressure control logic to be implemented. Refer to each of the matrix operating scenarios and modify (E) programming, if necessary, to correct air handler(AHU-1A &1B) and exhaust fan (EF-1 thru 4) isolation damper operation as shown in each of the matrix isolation damper columns. . Refer to the matrix column for shutdown control of the recirculating air handlers(RACUs) for each of the matrix events. Refer to the NARRATIVE SITUATION SUMMARY column for each scenario. Also refer to the last column of the matrix for comments about whether or not an event initiates lab evacuation.

12. While maintaining the fixed exhaust air flow rates for EF-1&2 given under NORMAL OPERATIONS, objective is to provide a positive room pressure differential in the FAB with respect to outside hallway and at the same time provide a negative room pressure differential between the GAS BUNKER and the FAB to prevent the possibility of exfiltrating pyrophoric gases from the GAS BUNKERS into the FAB.

.

B. Air Balance Set-up & Start-up Proceedure :

1. Once all control changes have been completed and initial programming to allow start-up to proceed completed and before there has been any changes to (E) air handler and exhaust fan speed set-points the air handlers(AHU-1A & 1B) and exhaust fans(EF-1 thru 4) should be started –up and allowed to operate under the (N) control logic. Any obvious corrections should be made.

2. Operating in the NORMAL OPERATING MODE the measured operating air flows and room DPs should be compared to the SOO Matrix(3-26-2010) calculated values. This information should be evaluated to determine what initial corrective action in operating set-points necessary.

3. The first step is to establish the exhaust fan(EF-1 & 2) air flow set-point. During NORMAL OPERATION: both exhaust fans (EF-1 & 2) are set-up to run in parallel at three fixed VFD speed signals. The FIRST FIXED VFD SPEED SIGNAL programmed to provide the constant air flow cfm that provides the design air flow of at least 4 cfm/sq.ft Matrix value is –39,000 cfm for both fans. The SECOND FIXED VFD SPEED SIGNAL is the maximum speed signal for any one exhaust fan to run at -60,000 cfm each.This assures that during an out of service event for exhaust fan(EF-1 or 2) the minimum ventilation rate at 4 cfm/sq.ft for the FAB L3M & L5 shall be maintained. The THIRD FIXED VFD SPEED SIGNAL is a minimum air flow set-point to run exhaust fan(EF-1 or 2) to provide minimal ventilation -12,000 cfm in the FAB without creating too prohibitive negative FAB room DP in the event both air handlers(AHU-1A & 1B) go out of service Changeover from the three fixed VFD speed signals have to include control interface with all equipment affected by the speed signal change-over and ample time for required isolation damper operation and proof of flow to take place. Also the BAS needs to be programmed to be informed of all NORMAL and ALARM MODES that take place.

Comment [RJS6]: The limits of operation must be clearly identified up front. The actual operational parameters necessary to produce the desired Fab Pressure/Bunker Pressure in each mode can be physically determined by overriding fans & devices (TAB & Siemens) and the variable measured and documented in each SOO Mode. If an operational limit must be crossed to obtain a specified condition, the system(s) must be re-evaluated to see what modifications are necessary and will not affect the other SOO Modes.

Comment [RJS7]: The proof of flow using the flow stations may not be a practical consideration as the SOO Modes of operation wreak havoc with air velocity and direction in the ductwork. Consider use of VFD "Status" (NOT Command or Input) for actual Status of Fan.

Comment [RJS8]: Has the possibility been explored of contingencies (Installation of more supply openings, etc.) in case the current installation is incapable of rendering the correct Bunker DP in each mode?

Comment [RJS9]: RSA is completely conversant with the system and a small discussion with them would be sufficient for them to understand the intent and probably to assist in the efficient and accurate performance and procurement of the designer's intent.

Desired room pressures, pressure direction and limits in each SOO Mode would be sufficient direction. RSA & Siemens could take the system, configure them in each "matrix" mode and close/open dampers, speed up/slow down fans until the desired condition in that mode was determined. They could then document the airflow to ensure it is acceptable, document the system and component configuration in this mode and move to the next mode…

When the system is re-programmed to operate automatically without any manual intervention, the Fab is ready to test. When the automatic test succeeds, the system is ready to be witnessed.

Comment [RJS10]: I believe the objective is to operate EF-1&2 to maintain Exhaust Ventilation while AHU controls Fab DP and EF-3&4 controls Gas Cabinet Ventilation and Bunker DP. If the "3 (or more) fixed VFD" speed strategy can be utilized within the SOO Modes, the stated SOO is adequate. If Fixed VFD Speeds cannot accomplish these intents (See comment 11) during the multiple SOO Modes, consideration may need to be given to revising the control strategy within the Siemens controller. This might be accomplished by a "Selector" device / program of some sort. The General Exhaust Duct Static Pressure and the Fab DP would the Selector's inputs, the output would be to the VFD controlling EF-1&2.

The input from the Fab DP would be "OFF" whenever both AHU's were available, leaving the duct static in control of the EF-1 & 2 VFD speed. When an AHU failed, the Selector would change the input to the Fab DP, now controlling the EF-1&2 VFD speed to maintain Fab pressure.

... [1]

A Picture's Worth a Thousand Words

(And also Thousands of Dollars)

Description	Make-up Air (CFM)		Lab Exhaust (CFM)		Either Ambient Air Intake Damper (Status (CFM))	Gas Vault Exhaust (CFM)		Recirc Air Handlers	Recirc Air Handlers	Net Lab Pressure (Total Inlet - (Exhaust + Damper)		
	AHU-1A	AHU-1B	EF-1	EF-2		EF-3	EF-4					
	LSM	LS	LSM	LS				LSM	LS			
Equipment Capacity (CFM)	48,000	48,000	40,000	40,000		8,000	8,000					
Normal Operations	43,918	43,918	-38,108	-38,108	0	-2828	-2828	ON	ON	4992	+	
Normal EF-1 Fails/Service	33,368	38,368	0	-40,000	0	-2828	-2828	ON	ON	4990	+	
Normal EF-2 Fails/Service	33,368	38,368	-40,000	0	0	-2828	-2828	ON	ON	4990	+	
Normal EF-1 & 2 Both Fail	0	0	0	0	0	-2828	-2828	ON	ON	-8980	+	Shut down AHU-1A & 1B if EF-1 & 2 "fail", "Close" Emergency Intake Dampers. EF-3 & 4 remain "on". Evacuate labs diabled due to HazMat Safety Condition.
Normal AHU-1A Fails/Service	0	40,000	-38108	-38108	41,000	-2828	-2828	ON	ON	6992	+	
Normal AHU-1b Fails/Service	40,000	0	-38108	-38108	41,000	-2828	-2828	ON	ON	6992	+	
Normal AHU-1A&1B Both Fail	0	0	-38108	0	41,000	-2828	-2828	ON	ON	-2969	+	Shut down EF-2. "Open" Emergency Intake Dampers(+41,000 cfm). Labs will go slightly negative. EF-3 & 4 remain "on". Evacuate labs
Toxic Gas	43,918	43,918	-40,000	-40,000	52000	-2828	-2828	OFF	OFF	-4920	-	Toxic gas will initiate the following sequence of events:1) activate HazMat. alarm audible and visual signal 2) annunciate at the fie alarm control panel, 3) transmit a signal to the UC Campus Police, 4) release automatic door holders, 5) recall elevators, 6) activate full "on" condition in dimming systems, 7) shutdown recirculation air handlers RAHU-1 thru 28 and 8) shutdown toxic gas systems.
Toxic Gas EF-1 Fails	28,878	28,878	0	-40,000	0	-2828	-2828	OFF	OFF	-8900	-	Close both the Emergency Intake dampers. Activate all toxic gas sequences indicated above
Toxic Gas EF-2 Fails	28,878	28,878	-40,000	0	0	-2828	-2828	OFF	OFF	-8900	-	Close both the Emergency Intake dampers. Activate all toxic gas sequences indicated above
Toxic Gas Both EF-1 & 2 Fail	0	0	0	0	0	-2828	-2828	OFF	OFF	-8980	-	Shutdown AHU-1A & 1B if EF-1 & 2 "fail", "Close" the Emergency Intake Dampers. Activate all toxic gas sequence of events indicated above. Close both Emergency Intake dampers. EF-3 & 4 remain "on". Evacuate labs disabled due to HazMat Safety Condition
Toxic Gas AHU-1A Fails	0	40,000	-38108	-38108	52000	-2828	-2828	OFF	OFF	-2058	-	Close the smaller emergency intake damper Activate all toxic gas sequences indicated above
Toxic Gas AHU-1B Fails	40,000	0	-38108	-38108	52000	-2828	-2828	OFF	OFF	-2058	-	Close the smaller emergency intake damper Activate all toxic gas sequences indicated above
Toxic Gas AHU-1A & 1B Fail Alarm Activation from Toxic Gas Monitoring	0	0	-38108	0	41,000	-2828	-2828	OFF	OFF	-2969	-	If both AHU-1A & 1B shutdown EF-2. Labs will go slightly negative, all fab fire/smoke dampers close. Open both emergency intake dampers. EF-3 & 4 remain "on". Activate all toxic gas sequences indicated above. Evacuate labs diabled due to HazMat Safety Condition.

Description	Make-up Air (CFM)		Lab Exhaust (CFM)		Either Ambient Air Intake Damper (Status (CFM))	Gas Vault Exhaust (CFM)		Recirc Air Handlers	Recirc Air Handlers	Net Lab Pressure (Total Inlet - (Exhaust + Damper)		
	AHU-1A	AHU-1B	EF-1	EF-2		EF-3	EF-4					
	LSM	LS	LSM	LS				LSM	LS			
Power Out Emergency Gen On	49002	0	-38,108	0	0	-2828	-2828	OFF	OFF	4371	+	Fire Smoke dampers will "close" and then "open" on a loss in power. Provide a delay in the control scheme so that sending a fire smoke damper "closure alarm" does not occur. RAHU units not on emergency power and will be "off"...
Activation Fire Alarm VESDA Alarm Level #2 VESDA Alarm Level#3 Sprinkler Water Flow	43,918	43,918	-40,000	-40,000	52,000	-2828	-2828	OFF	OFF	-4920	-	Labs go to a negative pressure condition.
Activation of Emergency Ventilation Switch /Hazmat Alarm	43,918	43,918	-40,000	-40,000	52000	-2828	-2828	OFF	OFF	-4920	-	Emergency ventilation or Hazmat Alarm will initiate the following sequence of events:1) annunicate at the fie alarm control panel, 2) transmit a signal to the UC Campus Police, 3) shutdown recirculation air handlers RAHU-1 thru 28 and 4) shutdown toxic gas systems.
Air Handler AHU-1A Smoke Detector Activation	0	40,000	-38,108	-38,108	41000	-2828	-2828	OFF	ON	6992	+	Air handler AHU-1A smoke detector alarm will shutdown AHU-1A and the sequence of events will be initiated:, (1) activate fire alarm audible and visual signal, (2) annunicate at the fire alarm control panel and at annunicators, (3) transmit a signal to the UC Campus Police, (4) release all magnetic door holders, (5) activate full "on" condition in dimming systems, (6) shutdown fab toxic gas systems.
Air Handler AHU-1B Smoke Detector Activation	40,000	0	-38,108	-38,108	41000	-2828	-2828	ON	OFF	6992	+	Air handler AHU-1B smoke detector alarm will shutdown AHU-1B and initiate the same sequence of events as indicated above
Air Handler AHU-1A & 1B Smoke Detector Activation	0	0	-38,108	0	41,000	-2828	-2828	OFF	OFF	-2969	-	All duct mounted fire/smoke dampers will "close" if both AHU-1A&1B shutdown.Also the same sequence of events as listed above with the exception that all recirculating air handlers will shutdown.
Normal Operations EF3 Out of Service	43,918	43,918	-38,108	-38,108	Closed	0	-8000	ON	ON	4,962	+	Chem/Gas Vault balanced to always be negative with respect to the Microfab. Microlab is slightly positive.
Normal Operations EF4 Out of Service	43,918	43,918	-38,108	-38,108	Closed	-8000	0	ON	ON	4,962	+	Chem/Gas Vault balanced to always be negative with respect to the Microfab. Microlab is slightly positive.
Normal Operations EF3 & 4 Out of Service	43,918	43,918	-38,108	-38,108	Closed	0	0	ON	ON	11,912	+	Labs remain positive with respect to Chem/Gas Vault. Evacuate labs diabled due to HazMat Saety Condition

A Picture's Worth a Thousand Words

(And also Thousands of Dollars)

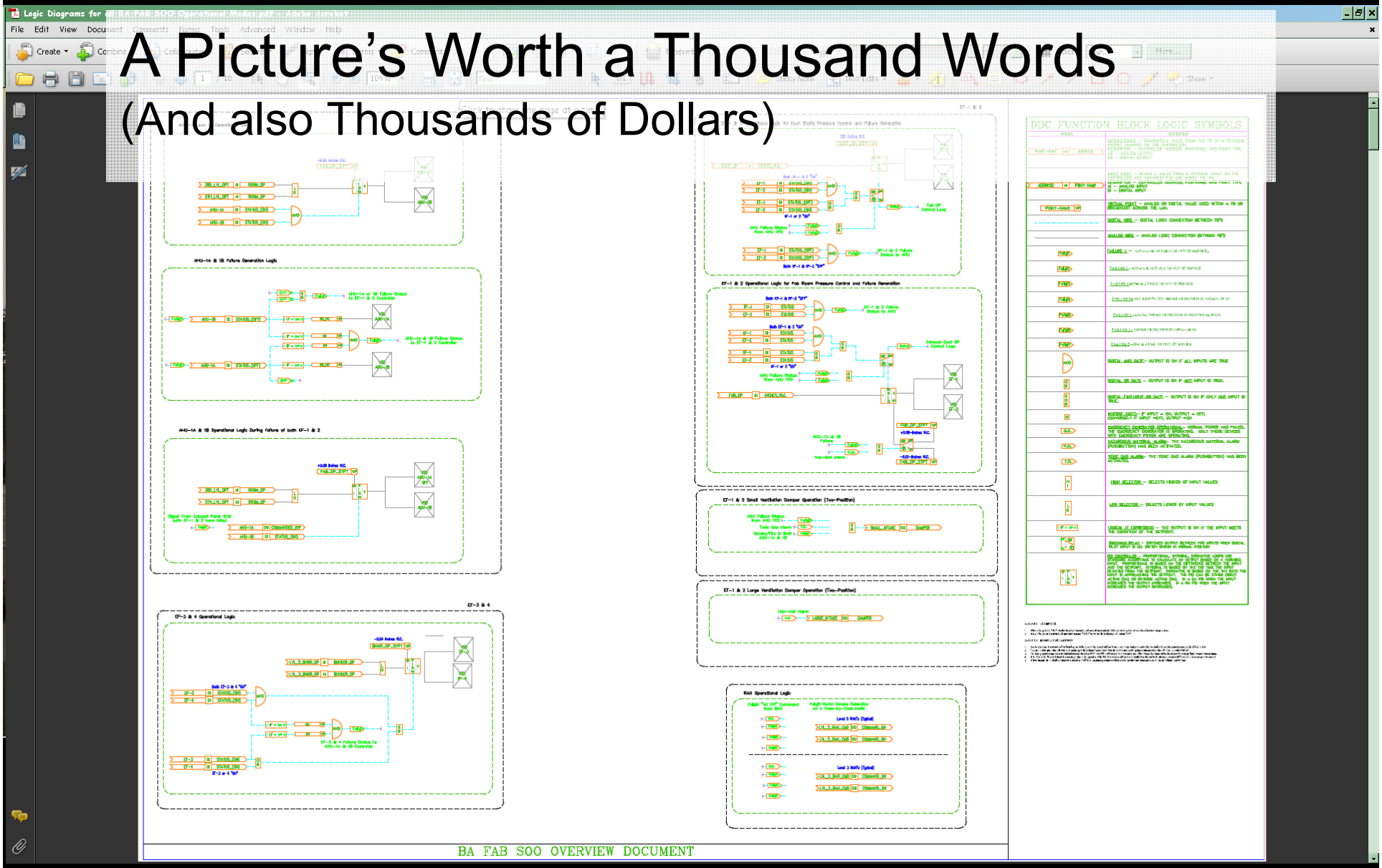

Free Tools for Playing with/Learning Logic

Eikon for Educators

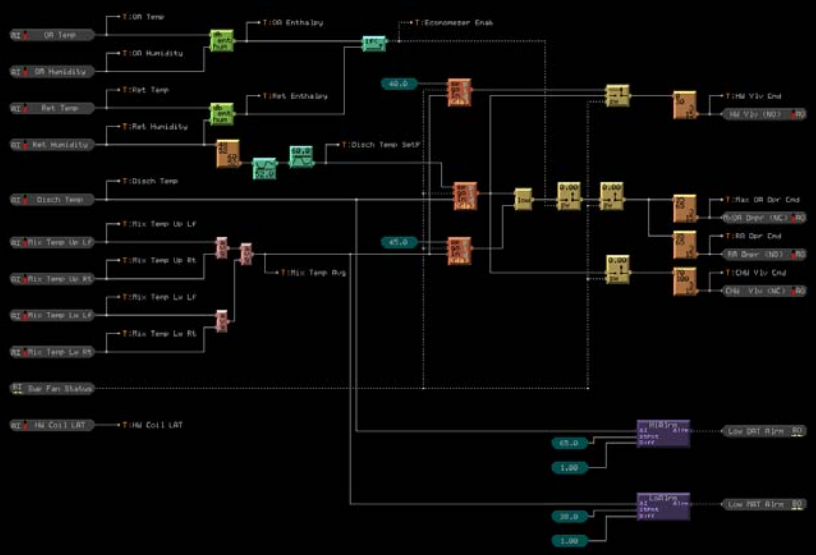

Automated Logic's Programming Language

WindLGC

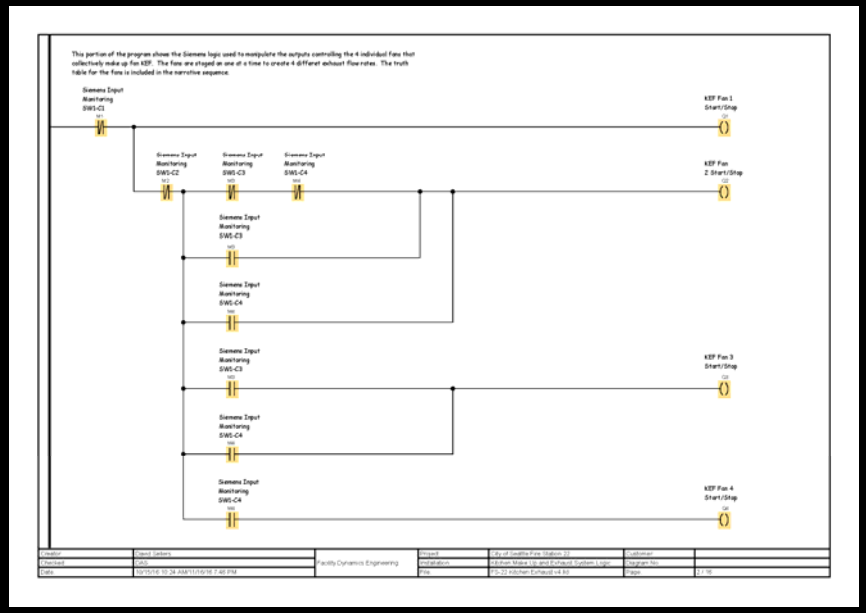

IDEC Smart Relay Programming Tool

http://www.av8rdas.com/eikon-for-educators-and-windlgc.html

Control Sequence Development Resources

- Control Spec Builder
- *How to Write Control Sequences*, published in Consulting Specifying Engineer, by Jay Santos and *The Joy of Writing Control Sequences,* published in Heating, Piping and Air Conditioning and available at: http://www.av8rdas.com/logic-diagram-tool.html