Section D

DAMPER OPERATORS AND DAMPERS

PISTON DAMPER OPERATOR AND BRACKET DIMENSIONS

Nos. 2S, 2, 3 and 4 Piston Damper Operator For Mounting On Duct or Wall

TABLE 1Da

Type W Bracket

Operator No.	Dimensions (in.)														
	A	B	C	D	E	F	G	H	J	K	L	M	N	O	P
2S	7 13/16	3 7/16	3 7/8	1 9/16	1 5/16	1 15/16					3 1/4	1 9/16	2 15/16	1 3/8	3 1/4
2	12 3/4	3 9/16	3 7/8	1 9/16	1 3/16	2	2	4 1/2	3 3/4	1 13/16	3 7/16	2 7/16	5 11/16	1 1/2	
3	14 1/2	4 5/8	4 3/4	1 15/16	1 3/8	2	2	5 5/8	4 3/8	2 3/8	4 1/2	2 7/8	6 11/16	1 15/16	
4	16 7/8	5 3/4	6	2 9/16	1 13/16	2	2	9 3/16	3 1/16	2 15/16	5 5/8	3	8 9/16	2 9/16	

Short Bracket

Operator No.	Dimensions (in.)								
	B	C	D	H	J	K	L	M	N
2	3 9/16	3 7/8	1 9/16	–	3 3/4	1 13/16	3 7/16	2 7/16	5 11/16
3	4 5/8	4 3/4	1 15/16	2 3/4	2 15/16	2 3/8	4 1/2	2 7/8	6 11/16
4	5 3/4	7 5/16	3 1/8	3 7/8	3 1/16	2 15/16	5 5/8	3	8 9/16

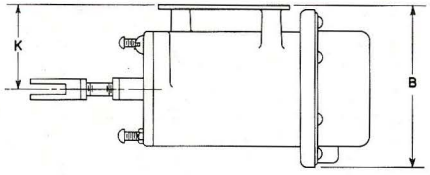

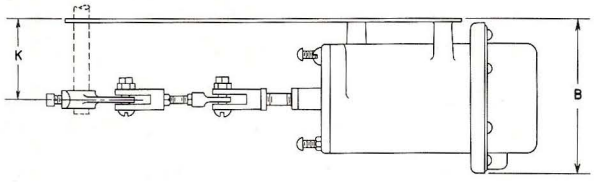

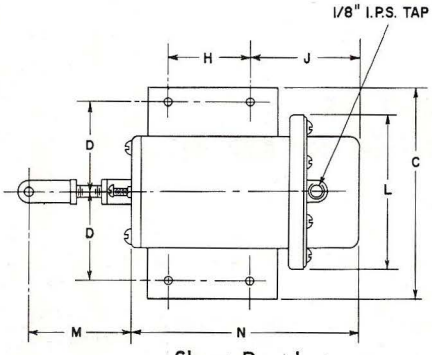

Short Bracket

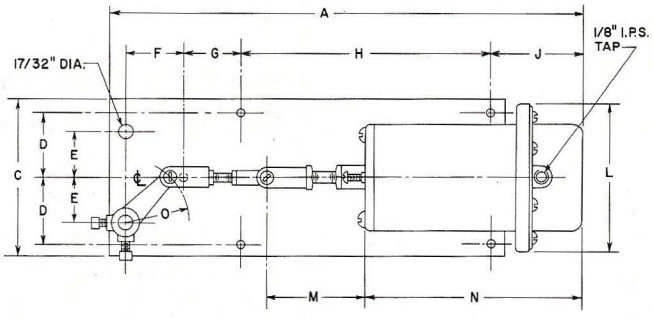

Type W Bracket

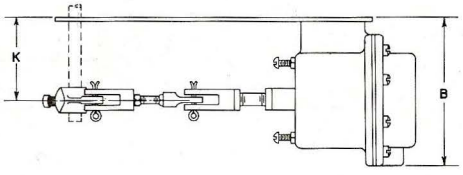

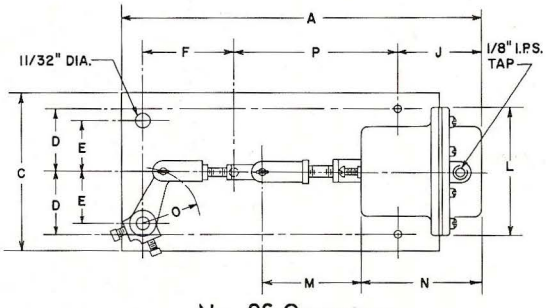

No. 2S Operator

NOS. 2, 3 AND 4 PISTON DAMPER OPERATORS FOR MOUNTING ON DAMPER FRAME. NORMALLY CLOSED DAMPERS

TABLE 2Da

Type F Bracket

Operator No.	Dimensions (in.)												Holes for Leaf Connection (diam)
	A	B	C	D	E	F	G	H	K	L	M	N	
2	12 1/4	3 5/8	3 1/4	15/16	1 1/4	1	1 1/16	1 15/16	2 9/16	1	–	9/16	13/64
3	14	4 3/4	5 9/16	1 15/16	2 1/8	1	1 3/8	2 1/2	3 3/16	1	–	9/16	13/64
4	16 5/16	5 15/16	5 5/8	1 15/16	2 1/8	1	1 13/16	3 1/4	–	–	15/16	9/16	17/64

Nos. 2, 3 and 4
Piston Damper Operators
For Mounting On Damper Frame.
Normally Closed Dampers

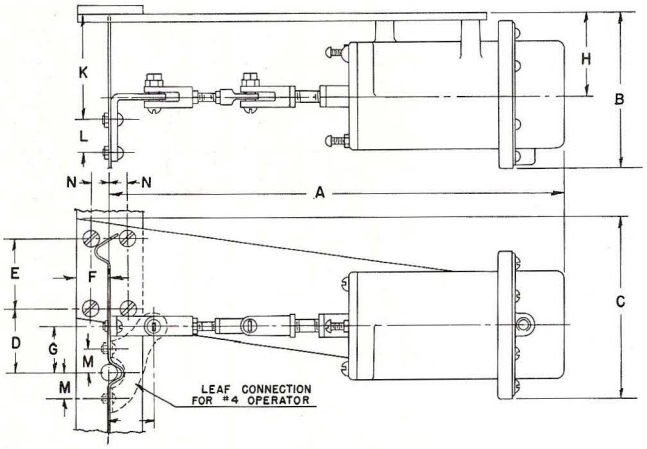

NOS. 3 AND 4 PISTON DAMPER OPERATORS FOR MOUNTING ON DAMPER FRAME. NORMALLY OPEN DAMPERS

TABLE 3Da

Type F Bracket

Operator No.	Dimensions (in.)										Holes for Leaf Connection (diam)
	A	B	C	D	E	F	G	H	J	K	
3	10 1/2	11 5/8	2 5/8	1 7/8	1 15/16	2 1/8	9/16	7/8	1	9/16	13/64
4	12 11/16	3 3/16	3 1/4	2 1/2	1 15/16	2 1/8	9/16	1 1/2	1	9/16	13/64

Nos. 3 and 4
Piston Damper Operators
For Mounting On Damper Frame.
Normally Open Dampers

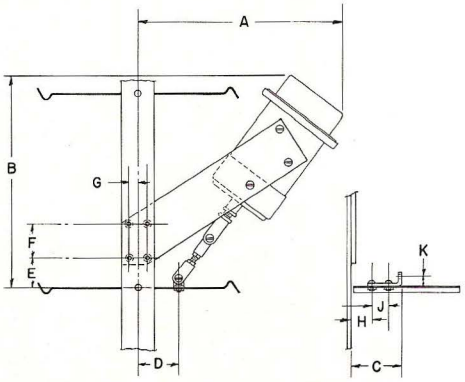

NOS. 4 AND 6 PISTON DAMPER OPERATORS FOR FLOOR MOUNTING

TABLE 4Da

Operator No.	Dimensions (in.)											
	A	B	C	D	E	F	G	H	J	K	L	M
4	3/4	5 1/4	6 1/2	12	5 3/4	11 1/4	10 1/4	19 1/2	9 5/16	6 5/16	5 3/4	–
6	1	7	11 3/8	16	4	5 3/8	20 3/16	27 1/4	18 1/4	7 1/16	8 5/8	1 7/16

No. 4 Piston Damper Operator For Floor Mounting

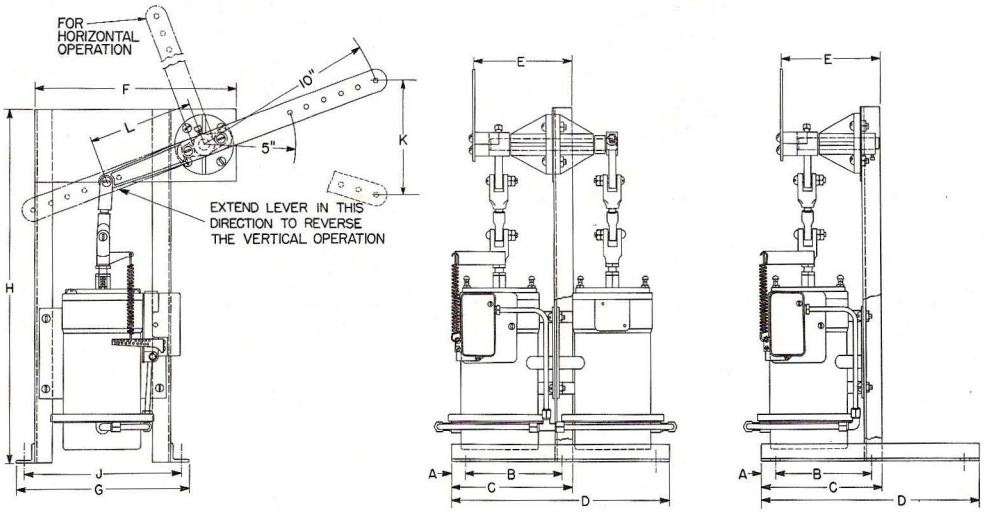

FRONT VIEW
Single and Double Piston Assemblies

SIDE VIEWS
Double Piston Assembly — Single Piston Assembly

No. 6 Piston Damper Operator For Floor Mounting

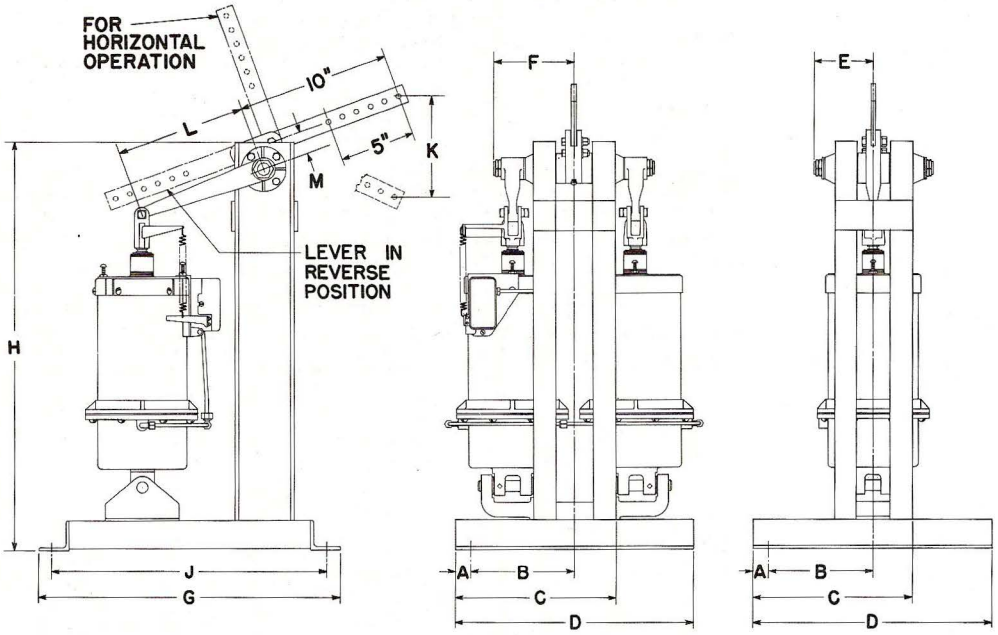

FRONT VIEW
Single and Double Piston Assemblies

SIDE VIEWS
Double Piston Assembly — Single Piston Assembly

D-255 DATA AND DIMENSIONS

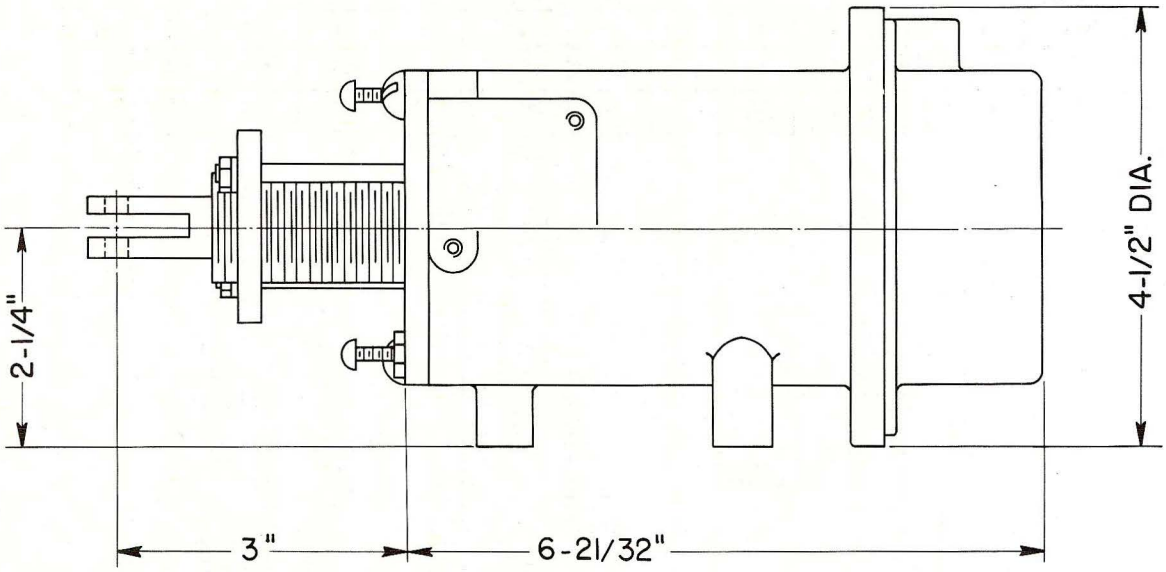

TABLE 5Da

Size	No. 3 Only
Operator	Two-Stage Piston Type
Stroke	Total –2¾" First Stage Adjustable 0 To 50% of Total Stroke
Nominal Spring Ranges	First Stage–3 To 6 psi Second Stage–9 To 12 psi
Maximum Available Force	Power Stroke–18.7 lbs at 15 psi Return Stroke–18.7 lbs
Maximum Work (Inch-Pounds)	Power–51.5 Return–51.5
Torques and Lever Arms For Various Angular Movements	Same as for No. 3 D-251 Shown in Table 16Da
Effective Area	6.24 sq in.
Maximum Control Pressure	20 psi

NO. 6 PISTON DAMPER OPERATOR FOR MOUNTING ON DUCT OR WALL

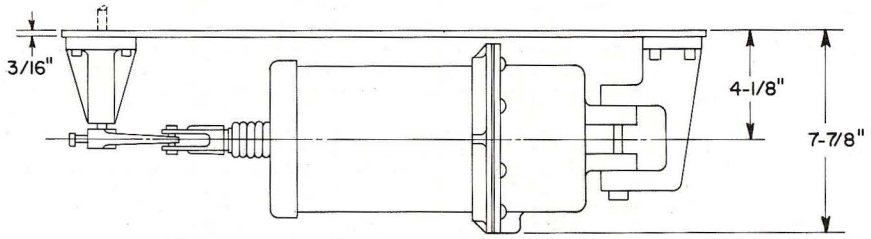

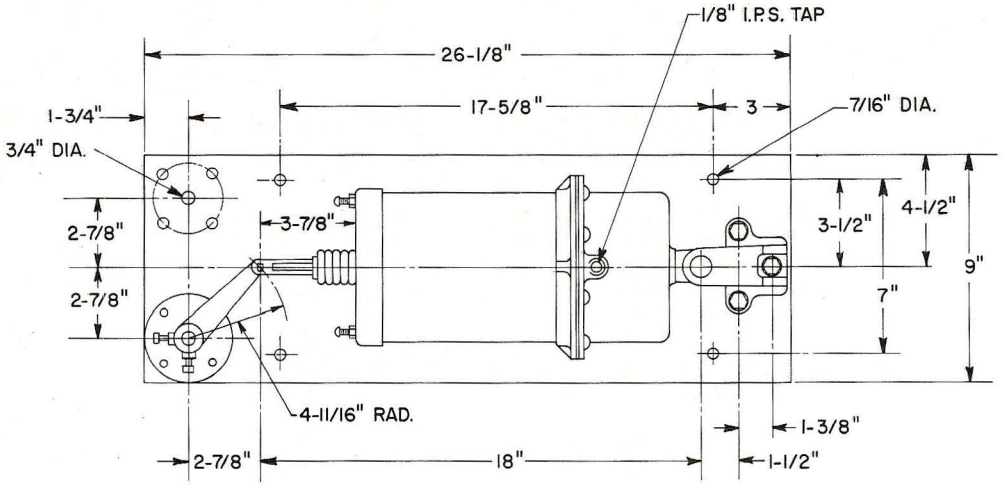

PISTON DAMPER OPERATOR RATINGS

TABLE 6Da Physical Data

Operator No.	Inside Diam (in.)	Effec Diaphragm Area (sq in.)	Max Stroke (in.)	Actual Stroke* (in.)
2 S	2	2.8	$1\frac{1}{8}$	1
2	2	2.8	$2\frac{5}{16}$	$2\frac{1}{8}$
3	3	6.24	3	$2\frac{3}{4}$
4	4	11.4	$3\frac{11}{16}$	$3\frac{5}{8}$
6	6	22.5	6	$5\frac{3}{4}$

*The actual stroke is used in all the computations for the following tables and charts. The actual stroke is less than the maximum stroke to allow for variations in linkages, etc.

MAXIMUM AVAILABLE FORCE
(Pounds)

TABLE 7Da

Operator No.	Stroke	Nominal Spring Range (lbs)							
		15 psi Supply Air				20 psi Supply Air			
		3-8	3-13	5-10	8-13	3-8	3-13	5-10	8-13
2S	Power	19.6	5.6	14.0	5.6	33.6	19.6	28.0	19.6
	Return	8.4	8.4	14.0	22.4	8.4	8.4	14.0	22.4
2	Power	19.6	5.6	14.0	5.6	33.6	19.6	28.0	19.6
	Return	8.4	8.4	14.0	22.4	8.4	8.4	14.0	22.4
3	Power	43.7	12.5	31.2	12.5	74.9	43.7	62.4	43.7
	Return	18.7	18.7	31.2	49.9	18.7	18.7	31.2	49.9
4	Power	79.8	22.8	57.0	22.8	136.8	79.8	114.0	79.8
	Return	34.2	34.2	57.0	91.2	34.2	34.2	57.0	91.2
6	Power	157.5	45.0	112.5	45.0	270.0	157.5	225.0	157.5
	Return	67.5	67.5	112.5	180.0	67.5	67.5	112.5	180.0

Note: *Nominal Spring Range* is the interval over which the piston moves from one extreme to the other when no external load is applied to the operator. It is expressed in terms of the control pressure on the diaphragm.

The force produced by each psi change in control pressure is equal to the effective area of the piston (see TABLE 6Da).

MAXIMUM WORK
(Inch-Pounds)

TABLE 8Da

Operator No.	Stroke	Nominal Spring Range (lbs)							
		15 psi Supply Air				20 psi Supply Air			
		3-8	3-13	5-10	8-13	3-8	3-13	5-10	8-13
2S	Power	19.6	5.6	14.0	5.6	33.6	19.6	28.0	19.6
	Return	8.4	8.4	14.0	22.4	8.4	8.4	14.0	22.4
2	Power	41.7	11.9	29.8	11.9	71.5	41.7	59.6	41.7
	Return	17.8	17.8	29.8	47.6	17.8	17.8	29.8	47.6
3	Power	120.0	34.4	85.9	34.4	206.0	120.0	171.6	120.0
	Return	51.5	51.5	85.9	137.2	51.5	51.5	85.9	137.2
4	Power	289.0	82.7	206.5	82.7	496.0	289.0	414.0	289.0
	Return	124.0	124.0	206.5	330.5	124.0	124.0	206.5	330.5
6	Power	906.0	259.0	645.0	259.0	1552.0	906.0	1294.0	906.0
	Return	388.0	388.0	645.0	1035.0	388.0	388.0	645.0	1035.0

USE OF MAXIMUM DAMPER AREA
TABLES 9Da THROUGH 12Da

1. Determine the maximum static pressure against which the damper must operate. If this is not available from the plans or specifications, use the maximum static pressure that the system fan can deliver.

2. Get the square foot face area of damper from the plans.

3. Determine the velocity of air through the damper in its wide open position. (cfm/ Face Area)

4. Select the operator spring range required for proper sequencing. Use as high a supply air pressure as practical.

5. Using the proper Table (9Da through 12Da) select the columns for static pressure, velocity and spring range determined above. (When using Tables 9Da and 10Da, disregard the spring range.) In the proper columns, locate the area next larger than that of the damper to be controlled. Find the proper operator size in the proper columns at the left of the table opposite the desired area figure. If the area of the damper exceeds the area shown in the table, divide by the necessary number of operators to decrease the damper area until it fits the table. Remember that when a damper requires more than one operator and a pilot positioner is used, the pilot line may be connected to several operators.

EXAMPLE 1:

Find pilot operator required for an opposed blade damper of 54 square feet area, using 5-10 psi spring. Fan static pressure 1.5" w.g. Duct velocity 2000 fpm.

From Table 11Da, under 5-10 psi spring column at 2000 fpm:

1) A No. 4 operator will position 36.5 square feet of damper. If it is undesirable to use a No. 6 operator use two No. 4 operators with one pilot positioner.

EXAMPLE 2:

Find operator required for a parallel blade damper of 4.2 square feet area. Static pressure is 2.0" w.g. Duct velocity is 1500 fpm.

From Table 10Da in 1500 fpm column at 2.0" static, one No. 3 operator will position 4.6 square feet of damper area.

TABLE 9Da

OPPOSED BLADE DAMPER AREA PER OPERATOR
(Proportional Control Without Pilot Positioner)

SYSTEM STATIC PRESSURE (IN. WG)	OPERATOR NO.	VELOCITY THRU DAMPER (fpm)			
		UP TO 1500	2000	2500	3000
.5	2	3.2	3.0	2.6	2.0
	3	9.2	8.4	7.4	6.4
	4	22.4	20.6	18.0	14.5
	6	70.0	64.6	56.0	42.6
1.0	2	2.4	2.2	2.0	1.8
	3	7.0	6.6	5.8	5.2
	4	16.8	15.6	14.0	12.6
	6	52.8	50.0	42.0	39.6
1.5	2	2.0	2.0	1.6	1.4
	3	6.0	6.0	4.4	4.0
	4	14.6	14.6	10.8	9.6
	6	46.0	46.0	34.0	30.0
2.0	2	1.8	1.8	1.6	1.0
	3	5.4	5.4	4.4	3.2
	4	12.8	12.8	10.8	7.6
	6	40.0	40.0	34.0	23.8
2.5	2	1.6	1.6	1.4	1.0
	3	4.8	4.4	4.4	3.0
	4	11.6	10.8	10.0	7.6
	6	36.8	34.0	33.2	23.2
3.0	2	1.6	1.6	1.4	1.0
	3	4.4	4.4	4.4	3.0
	4	10.8	10.8	10.6	7.4
	6	34.0	34.0	33.2	24.0

PARALLEL BLADE DAMPER AREA PER OPERATOR
(Proportional Control Without Pilot Positioner)

TABLE 10Da

SYSTEM STATIC PRESSURE (IN. WG)	OPERATOR NO.	VELOCITY THRU DAMPER (fpm)				
		UP TO 1000	1500	2000	2500	3000
.5	2	3.2	2.6	2.1	1.9	1.6
	3	9.2	8.4	7.5	6.3	5.2
	4	22.4	20.2	17.0	15.6	12.4
	6	70.0	62.3	51.5	43.8	37.0
1.0	2	2.4	2.4	1.8	1.6	1.4
	3	7.0	7.0	5.4	5.0	4.2
	4	16.8	16.8	13.0	12.0	10.1
	6	52.8	52.4	40.8	37.2	32.3
1.5	2	2.4	1.8	1.4	1.2	1.2
	3	6.4	5.0	4.2	3.6	3.6
	4	15.2	12.2	10.0	8.8	8.6
	6	48.0	38.0	32.0	27.6	27.0
2.0	2	1.8	1.6	1.2	1.0	1.0
	3	5.4	4.6	3.4	2.8	2.8
	4	12.8	11.0	8.0	6.8	6.6
	6	40.0	34.0	25.4	21.2	20.6
2.5	2	1.6	1.4	1.2	1.0	0.8
	3	4.8	4.4	3.2	2.8	2.6
	4	11.8	10.6	8.0	6.8	6.2
	6	36.8	33.0	24.0	21.2	19.6
3.0	2	1.4	1.2	1.0	0.8	0.6
	3	4.0	3.6	2.8	2.2	2.0
	4	9.4	8.6	6.6	5.2	4.8
	6	30.0	27.0	21.0	16.0	14.8

TABLE 11Da

OPPOSED BLADE DAMPER AREA PER OPERATOR
(Two Position Control and Proportional Control With Pilot Positioner)

SYSTEM PRESSURE (IN. WG)	OPERATOR NO.	AREA IN SQUARE FEET FOR OPPOSED BLADE DAMPERS															
		SPRING RANGE 3–8 psi				SPRING RANGE 5–10 psi				SPRING RANGE 8–13 psi				SPRING RANGE 3–13 psi			
		VELOCITY (fpm)				VELOCITY (fpm)				VELOCITY (fpm)				VELOCITY (fpm)			
		UP TO 1500	2000	2500	3000	UP TO 1500	2000	2500	3000	UP TO 1500	2000	2500	3000	UP TO 1500	2000	2500	3000
0.5	2	4.8	4.5	3.9	3.3	8.0	7.5	6.5	5.3	8.8	7.8	6.7	5.2	4.8	4.5	3.9	3.2
	3	13.8	12.6	11.1	9.5	23.0	21.0	18.5	14.1	20.4	19.3	18.4	16.6	13.8	12.6	11.1	9.9
	4	33.6	30.9	27.0	22.1	56.0	51.5	45.0	36.5	51.6	47.9	44.3	40.8	33.6	30.9	27.0	23.1
	6	105.0	96.9	84.0	71.8	175.0	161.5	140.0	112.4	163.2	152.7	141.0	125.1	105.0	96.9	84.0	71.8
1.0	2	3.6	3.3	3.0	2.7	6.0	5.5	5.0	4.0	8.4	6.3	5.6	4.9	3.6	3.3	3.0	2.7
	3	10.5	9.9	8.7	7.8	17.5	16.5	14.5	11.3	24.5	18.9	17.5	15.3	10.5	9.9	8.7	7.8
	4	25.2	23.4	21.0	18.9	42.0	39.0	35.0	28.5	58.8	45.5	42.0	36.6	25.2	23.4	21.0	18.9
	6	79.2	75.0	63.0	59.4	132.0	125.0	105.0	85.0	183.4	142.8	130.2	112.4	79.2	75.0	63.0	59.4
1.5	2	3.0	3.0	2.4	2.1	5.0	5.0	4.0	3.0	6.3	4.9	4.2	4.2	3.0	3.0	2.4	2.1
	3	9.0	9.0	6.6	6.0	15.0	15.0	11.0	9.0	17.5	14.7	12.6	12.6	9.0	9.0	6.6	6.0
	4	21.9	21.9	16.2	14.4	36.5	36.5	27.0	21.5	42.7	35.0	30.8	30.1	21.9	21.9	16.2	14.4
	6	69.0	69.0	51.0	45.0	115.0	115.0	85.0	67.0	133.0	112.0	96.6	94.5	69.0	69.0	51.0	45.0
2.0	2	2.7	2.7	2.4	1.5	4.5	4.5	4.0	2.5	5.6	4.2	3.5	3.5	2.7	2.7	2.4	1.5
	3	8.1	8.1	6.6	4.8	13.5	13.5	11.0	7.0	16.1	11.9	9.8	9.8	8.1	8.1	6.6	4.8
	4	19.2	19.2	16.2	11.4	32.0	32.0	27.0	16.5	38.5	28.0	23.8	23.1	19.2	19.2	16.2	11.4
	6	60.0	60.0	51.0	35.7	100.0	100.0	85.0	51.5	119.0	88.9	74.2	72.1	60.0	60.0	51.0	35.7
2.5	2	2.4	2.4	2.1	1.5	4.0	4.0	2.5	2.0	4.9	4.2	3.5	2.8	2.4	2.4	2.1	1.5
	3	7.2	6.6	6.6	4.5	12.0	12.0	7.0	6.5	15.4	11.2	9.8	9.1	7.2	6.6	6.6	4.5
	4	17.4	16.2	15.0	11.4	29.0	29.0	17.0	15.5	37.1	28.0	23.8	21.7	17.4	16.2	15.0	11.4
	6	55.2	51.0	49.8	34.8	92.0	92.0	53.0	49.0	115.5	84.0	74.2	68.6	55.2	51.0	49.8	34.8
3.0	2	2.4	2.4	2.1	1.5	4.0	4.0	2.0	1.5	4.2	3.5	2.8	2.1	2.4	2.4	2.1	1.5
	3	6.6	6.6	6.6	4.5	11.0	11.0	5.5	5.0	12.6	9.8	7.7	7.0	6.6	6.6	6.6	4.5
	4	16.2	16.2	15.9	11.1	27.0	27.0	13.0	12.0	30.1	23.1	18.2	16.8	16.2	16.2	15.9	11.1
	6	51.0	51.0	49.8	36.0	85.0	85.0	40.0	37.0	94.5	73.5	56.0	51.8	51.0	51.0	49.8	36.0

Note: Above areas are computed for 20 psi air supply. If 15 psi air supply is used the areas listed under the 8–13 psi range would be considerably less.

PARALLEL BLADE DAMPER AREA PER OPERATOR
(Two Position Control and Proportional Control With Pilot Positioner)

TABLE 12Da

SYSTEM PRESSURE (IN. WG)	OPERATOR NO.	AREA IN SQUARE FEET FOR PARALLEL BLADE DAMPERS															
		SPRING RANGE 3–8PSI				SPRING RANGE 5–10 PSI				SPRING RANGE 8–13 PSI				SPRING RANGE 3–13 PSI			
		VELOCITY (fpm)				VELOCITY (fpm)				VELOCITY (fpm)				VELOCITY (fpm)			
		UP TO 1000	1500	2000	2500 & 3000	UP TO 1000	1500	2000	2500 & 3000	UP TO 1000	1500	2000	2500 & 3000	UP TO 1000	1500	2000	2500& 3000
.5	2	4.8	4.5	3.9	3.3	8.0	7.5	6.5	5.3	11.2	8.8	7.8	5.2	4.8	12.6	3.9	3.2
	3	13.8	12.6	11.1	9.5	23.0	21.0	18.5	14.1	32.2	20.4	19.3	16.6	13.8	4.5	11.1	9.9
	4	33.6	30.9	27.0	22.1	56.0	51.5	45.0	36.5	78.4	51.6	47.9	40.8	33.6	30.9	27.0	23.1
	6	105.0	96.9	84.0	71.8	175.0	161.5	140.0	112.4	245.0	163.2	152.7	125.1	105.0	96.9	84.0	71.8
1.0	2	3.6	3.6	2.7	2.3	6.0	6.0	4.5	4.0	8.4	8.4	6.3	4.9	3.6	3.6	2.7	2.3
	3	10.5	10.5	8.1	6.2	7.5	17.5	13.5	11.3	24.5	24.5	18.9	15.3	10.5	10.5	8.1	6.8
	4	25.2	25.2	19.5	15.4	42.0	42.0	35.5	28.5	58.8	58.8	45.5	36.6	25.2	25.2	19.5	15.3
	6	79.2	78.6	61.2	50.7	132.0	131.0	102.0	85.0	184.8	183.4	142.8	112.4	79.2	78.6	61.2	50.8
1.5	2	5.7	2.7	2.1	1.8	9.5	4.5	3.5	3.0	13.3	6.3	4.9	4.2	5.7	2.7	2.1	1.8
	3	9.6	7.5	6.3	5.4	16.0	12.5	10.5	9.0	22.4	17.5	14.7	12.6	9.6	7.5	6.3	5.4
	4	22.8	18.3	15.0	12.9	38.0	30.5	25.0	21.5	53.2	42.7	35.0	30.1	22.8	18.3	15.0	12.9
	6	72.0	57.0	48.0	40.5	120.0	95.0	80.0	67.5	168.0	133.0	112.0	94.5	72.0	57.0	48.0	40.5
2.0	2	2.7	2.4	1.8	1.5	4.5	4.0	3.0	2.5	6.3	5.6	4.2	3.5	2.7	2.4	1.8	1.5
	3	8.1	6.9	5.1	4.2	13.5	11.5	8.5	7.0	18.9	16.1	11.9	9.8	8.1	6.9	5.1	4.2
	4	19.2	16.5	12.0	9.9	32.0	27.5	20.0	16.5	44.8	38.5	28.0	23.1	19.2	16.5	12.0	9.9
	6	60.0	51.0	38.1	30.9	100.0	85.0	63.5	51.5	140.0	119.0	88.9	72.1	60.0	51.0	38.1	30.9
2.5	2	2.4	2.1	1.8	1.2	4.0	3.5	3.0	2.0	5.6	4.9	4.2	2.8	2.4	2.1	1.8	1.2
	3	7.2	6.6	4.8	3.9	12.0	11.0	8.0	6.5	16.8	15.4	11.2	9.1	7.2	6.6	4.8	3.9
	4	17.7	15.9	12.0	9.3	29.5	26.5	20.0	15.5	41.3	37.1	28.0	21.7	17.7	15.9	12.0	9.3
	6	55.2	49.5	36.0	29.4	92.0	82.5	60.0	49.0	128.8	115.5	84.0	68.6	55.2	49.5	36.0	29.4
3.0	2	2.1	1.8	1.5	.9	3.5	3.0	2.5	1.5	4.9	4.2	3.5	2.1	2.1	1.8	1.5	.9
	3	6.0	5.4	4.2	3.0	10.0	9.0	7.0	5.0	14.0	12.6	9.8	7.0	6.0	5.4	4.2	3.0
	4	14.1	12.9	9.9	7.2	23.5	21.5	16.5	7.0	32.9	30.1	23.1	16.8	14.1	12.9	9.9	7.2
	6	45.0	40.5	31.5	22.2	75.0	67.5	52.5	37.0	105.0	94.5	73.5	51.8	45.0	40.5	31.5	22.2

NOTE: Above areas are computed for 20 psi air supply. If 15 psi air supply is used the areas listed under the 8–13 psi range would be considerably less.

DOUBLE DIAPHRAGM DAMPER OPERATORS
DIMENSIONS

TABLE 13Da

Operator No.	Dimensions (in.)									Movement at Diaphragm Center
	A	B	C	D	E	F	G	H	J	
2	6	4 1/2	6 1/4	5 13/16	4 15/16	8 7/8	5 1/2	2 23/32	19 13/16	9/16
3	8 1/8	5 1/4	7	7 3/16	4 15/16	11 1/2	6 3/4	4 9/32	29 3/4	1
4	11 7/8	7 3/8	9	8 5/8	4 15/16	14 7/8	6 3/4	5 3/16	36	1

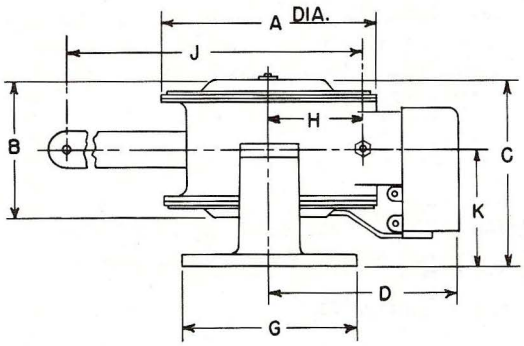

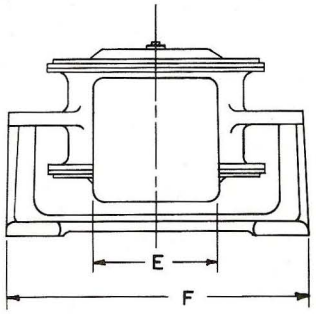

RATINGS

Maximum Available Force*
(Pounds)

TABLE 14Da

Operator No.	Supply Air Pressure (psi)			
	15	20	25	30
2	21	28	35	42
3	39	52	65	78
4	94	125	156	187

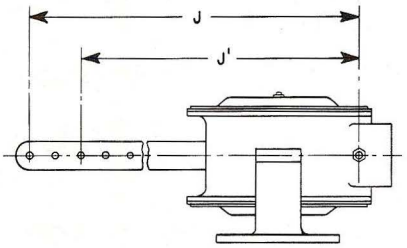

*Available force applied at the end of a standard lever arm. To find available force at any other lever arm length (J'), multiply values by ratio $\frac{J}{J'}$. See table 13Da for dimensions.

Maximum Work
(Inch-Pounds)

TABLE 15Da

Operator No.	Supply Air Pressure (psi)			
	15	20	25	30
2	87	115	144	174
3	270	360	450	540
4	650	867	1085	1300

ANGULAR MOVEMENT AND LENGTH OF LEVER ARM REQUIRED TO PRODUCE LINEAR MOVEMENT

(See Chart "A", page Da:13)

Chart "A" is used when it is necessary to find the angular movement and the length of lever arm required to produce a given linear movement. This information must be obtained from the chart when it has not been supplied by the manufacturer.

EXAMPLE: Assume that it is desired to operate a set of fan inlet vanes, and that the fan manufacturer has furnished the information that a force (F) of 10 pounds at a radius (R) of 20 inches is required to operate the lever, and that this force must move through a distance (D) of 5¼ inches to operate the vanes from closed to open. The angular movement of the lever and the torque required to move it must be found before the operator of the proper size can be selected.

SOLUTION:

The torque is F x R = 10 x 20 = 200 pound-inches.

To find the angular movement of the lever, use Chart "A", which shows the relationship between the length (R) of lever arm, the travel (D) at the end of the lever, and the angular movement (a) in degrees. Two sets of horizontal and vertical scales are provided. Use the inner set for lever arms of 10 inches or less, and the outer set for longer lever arms. To find the angular movement (a) at 20 inches on the outer horizontal scale, follow the arc up until it intersects a horizontal line drawn through "5¼ inches " on the outer vertical scale. Where the arc and this horizontal line intersect, read "15 degrees" angular movement on the radial lines.

SIZE OF PISTON OPERATOR AND LENGTH OF LEVER ARM REQUIRED TO PRODUCE ANGULAR MOTION FOR REPOSITIONING

(See Table 16Da, page Da:14)

When the torque and the angular movement required to operate a device (such as fan inlet vanes, compressor suction dampers, fluid couplings, etc.) are known, Table 16Da should be used to determine the size of operator and length of lever arm necessary to produce angular motion for repositioning.

To determine the proper size operator it is first necessary to know the following:

1. Maximum available air pressure. (For the following examples 15 psi supply air is used)
2. Type of operation—two-position or proportional.
3. The spring range.
4. Maximum allowable pressure change for repositioning the device.

For two-position operation, or proportional operation using a pilot positioner, the full available pressure for repositianing may be used; that is, for a 5-10 psi spring, 15 minus 10, or 5 psi, is available for repositioning on the power stroke and 5 minus 0, or 5 psi, is available for repositioning on the return stroke.

This is not true where proportional operation is desired. It is necessary to determine the allowable change in air pressure for repositioning, and this allowable change will depend upon the accuracy of control desired and the sensitivity of the controller. To a great extent, this allowable change is based on experience.

EXAMPLE: Determine the size of piston operator required to operate a set of fan inlet vanes through 15 degrees angular movement with a maximum torque of 200 pound-inches.

For Two-Position Operation, or Proportional Operation Using a Pilot Positioner:

Using a 5-10 psi spring the maximum available pressure for repositioning is 5 psi.

Torque per psi = $\frac{200}{5}$ = 40 pound-inches.

Enter Table 16Da on the horizontal line for 15 degrees of angular movement and select the smallest piston operator having a torque of 40 or more pound-inches per psi. In this case a No. 3 operator having 65.3 pound-inches per psi is sufficient. The next column shows that a lever arm of 10½ inches is required.

For Proportional Operation:

Assume that the inlet vanes are to be controlled from a proportional acting thermostat having a sensitivity of 2 psi/degree, and that it is desired to reposition the inlet vanes on a temperature change of one degree. Then the damper operator must reposition the inlet vanes on a pressure change of 2 psi.

Torque per psi = $\frac{200}{2}$ = 100 pound-inches.

On the horizontal line for 15 degrees the smallest operator having a torque of 100 or more pound-inches is a No. 4 operator with a torque of 157 pound-inches per psi. The next column shows that a lever arm of 13⅞ inches is required.

After the piston operator has been selected, the actual pressure change required for repositioning is $\frac{200}{157}$ = 1.28 psi.

CHART A

Chart showing relationship between:
1) Length of lever arm (R) – inches
2) Travel at end of lever (D) – inches
3) Angular movement (a) – degrees

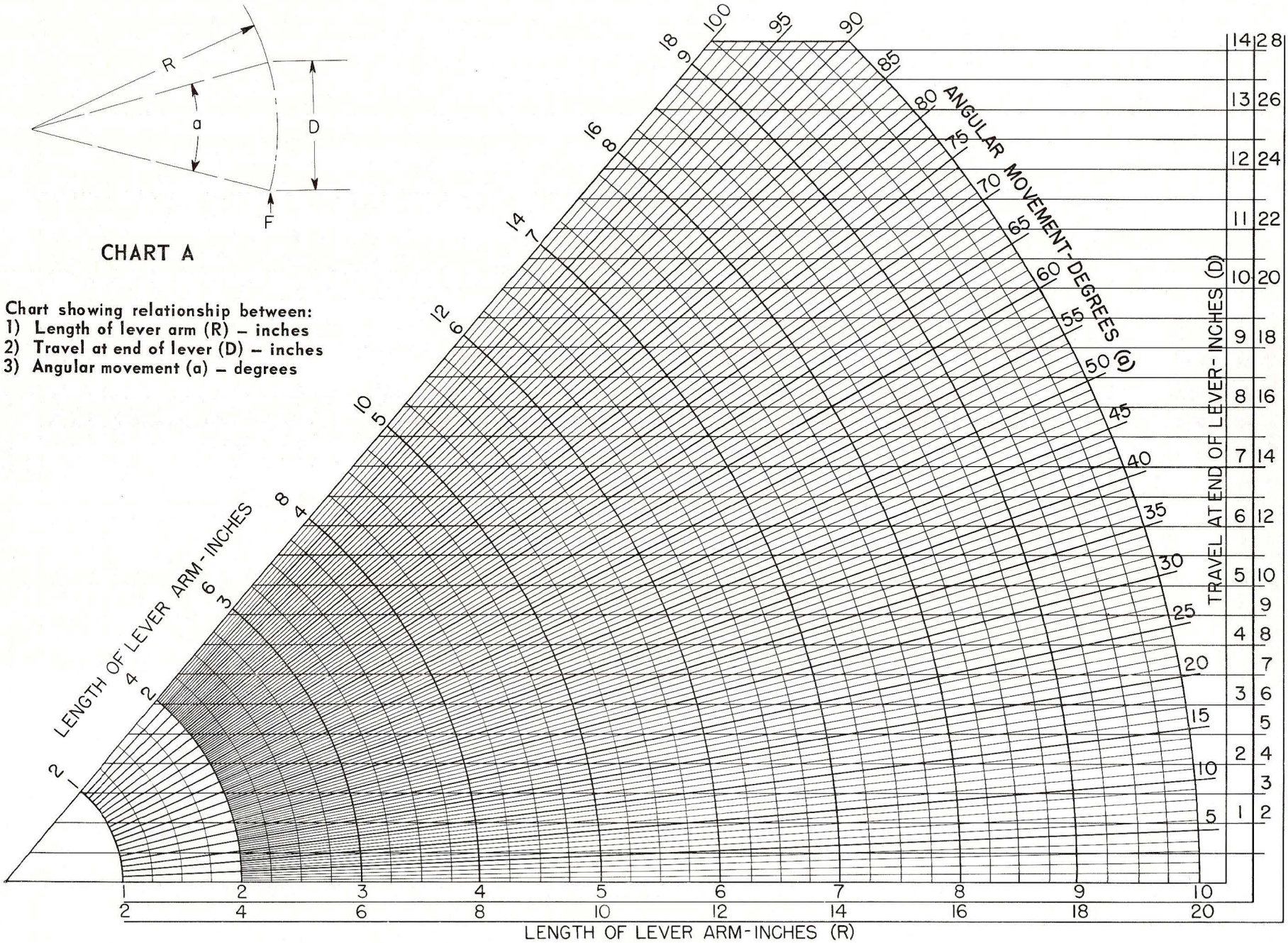

JOHNSON SERVICE COMPANY, MILWAUKEE, WIS.

Da:13
DAMPER
OPERATORS

TORQUES* AND LEVER ARM LENGTHS FOR VARIOUS ANGULAR MOVEMENTS

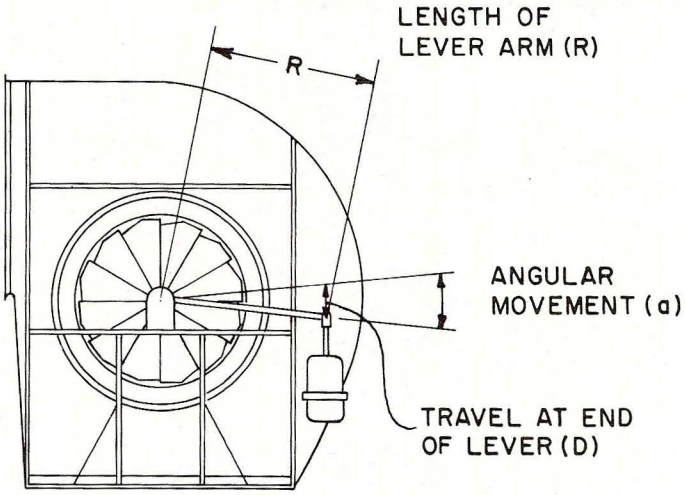

TABLE 16Da

Angular Movement (a) (Degrees)	No. 2 Operator		No. 3 Operator		No. 4 Operator		No. 6 Operator	
	Torque (lb-in.)	Length of Lever (R) Arm (in.)	Torque (lb-in.)	Length of Lever (R) Arm (in.)	Torque (lb-in.)	Length of Lever (R) Arm (in.)	Torque (lb-in.)	Length of Lever (R) Arm (in.)
5	68.40	24 3/8	197.00	31 1/2	475.00	41 5/8	1485.00	66
6	56.90	20 5/16	164.00	26 5/16	396.00	34 11/16	1240.00	55
7	48.70	17 3/8	140.00	22 1/2	339.00	29 11/16	1060.00	47
8	42.60	15 3/16	123.00	19 11/16	296.00	26	930.00	41
9	37.80	13 1/2	109.00	17 1/2	264.00	23 1/8	827.00	37
10	34.20	12 3/16	98.50	15 3/4	237.00	20 13/16	743.00	33
11	31.00	11 1/8	89.50	14 3/8	213.00	18 7/8	673.00	30
12	28.22	10 1/8	81.90	13 1/8	197.00	17 3/8	615.00	27 1/2
13	26.20	9 3/8	75.50	12 1/8	181.00	16	570.00	25 1/2
14	24.30	8 3/4	70.00	11 5/16	169.00	14 7/8	527.00	23 1/2
15	22.60	8 1/8	65.30	10 1/2	157.00	13 7/8	491.00	22
16	21.20	7 5/8	61.20	9 7/8	147.00	13	462.00	20 5/8
18	18.80	6 13/16	54.20	8 13/16	131.00	11 5/8	408.00	18 3/8
20	16.90	6 1/8	48.70	7 15/16	117.00	10 7/16	367.00	16 9/16
22	15.30	5 9/16	44.20	7 1/4	106.00	9 1/2	332.00	15 1/16
24	14.00	5 1/8	40.40	6 5/8	97.30	8 3/4	304.00	13 7/8
26	12.90	4 3/4	37.20	6 1/8	89.50	8 1/16	280.00	12 13/16
28	11.95	4 3/8	34.50	5 11/16	83.00	7 1/2	260.00	11 15/16
30	11.10	4 1/8	32.00	5 3/16	77.40	7	242.00	11 1/8
35	9.47	3 9/16	27.30	4 9/16	65.50	6	205.00	9 9/16
40	8.18	3 1/8	23.60	4	57.00	5 5/16	178.00	8 7/16
45	7.20	2 3/4	20.70	3 9/16	50.00	4 3/4	156.50	7 1/2
50	6.39	2 1/2	18.40	3 1/4	44.20	4 5/16	139.00	6 13/16
55	5.65	2 5/16	16.50	3	39.80	3 15/16	124.50	6 1/4
60	5.15	2 1/8	14.90	2 3/4	35.80	3 5/8	112.30	5 3/4
65	4.68	2	13.50	2 1/2	32.50	3 3/8	102.00	5 3/8
70	4.31	1 7/8	12.25	2 3/8	29.50	3 3/16	93.00	5
75	3.89	1 3/4	11.20	2 1/4	27.00	3	84.50	4 3/4
80	3.56	1 5/8	10.25	2 1/8	24.60	2 13/16	77.30	4 1/2
85	3.25	1 9/16	9.37	2	22.60	2 11/16	70.70	4 1/4
90	2.97	1 1/2	8.55	1 15/16	20.60	2 9/16	64.70	4 1/16
95	2.72	1 7/16	7.86	1 7/8	18.90	2 1/2	59.20	3 15/16
100	2.49	1 3/8	7.18	1 13/16	17.50	2 3/8	54.30	3 3/4

* Torque produced by one psi change in supply air pressure

AIR LEAKAGE THROUGH JOHNSON DAMPERS

CLOSED PARALLEL PLAIN DAMPER (Fig. 1)

To find the total air leakage through closed parallel plain dampers, use Chart 1 and proceed as follows:

EXAMPLE:

Axis length of damper	3 ft
Height of damper	4.5 ft
Pressure differential	3 in. water

On family of curves designated as 3 ft axis, locate the intersection of 3 in. on the pressure differential scale at the 4.5 ft damper height curve. Read total leakage off scale at base of Chart 1 in cfm of standard air. The answer is 925 cfm.

CLOSED PROPORTIONING PLAIN DAMPERS

When determining total air leakage for proportioning dampers, (Chart 2) the dashed curves represent the flow direction and damper arrangement shown in Fig. 2. The solid curves of the same chart represent the arrangement shown in Fig. 3.

To find the total leakage through closed proportioning plain dampers, use Chart 2 and proceed as follows:

EXAMPLE:

Direction of air flow (Fig. 3)

Axis length of damper	4 ft
Height of damper	3 ft
Pressure differential	3 in. water

On family of curves designated as 4 ft axis, locate the intersection of 3 in. on pressure differential scale and the 3 ft damper height curve. Read the total leakage off scale at base of chart in cfm of standard air. The answer is 790 cfm.

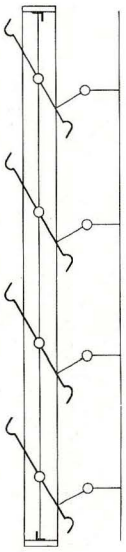

FIG. 1: PARALLEL DAMPER
(Use Chart 1)

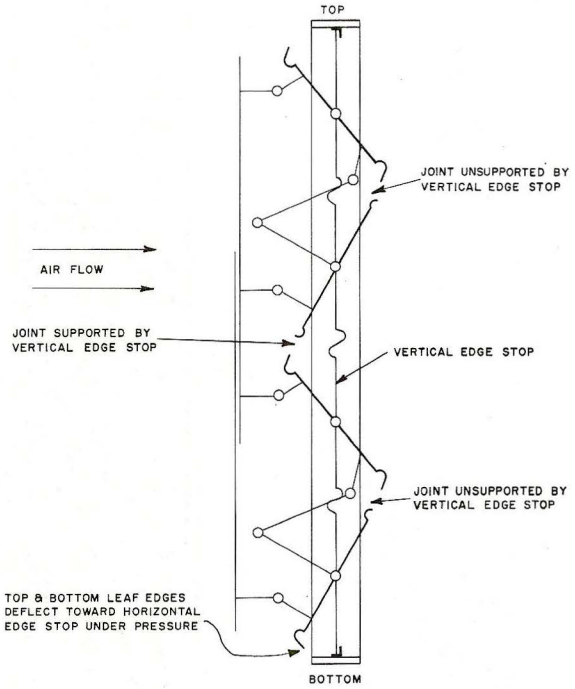

FIG. 2: PROPORTIONING DAMPER
(Use Dashed Curves of Chart 2)

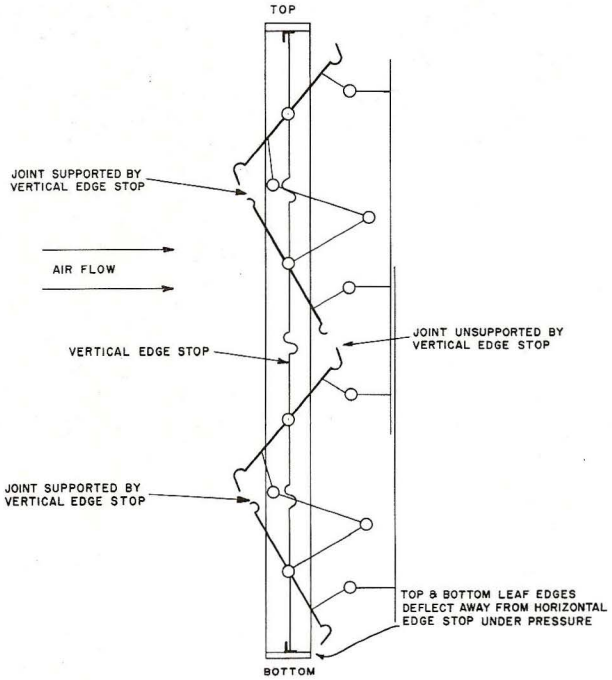

FIG. 3: PROPORTIONING DAMPER
REVERSE POSITION
(Use Solid Curves of Chart 2)

CHART 1

AIR LEAKAGE THROUGH PARALLEL DAMPERS

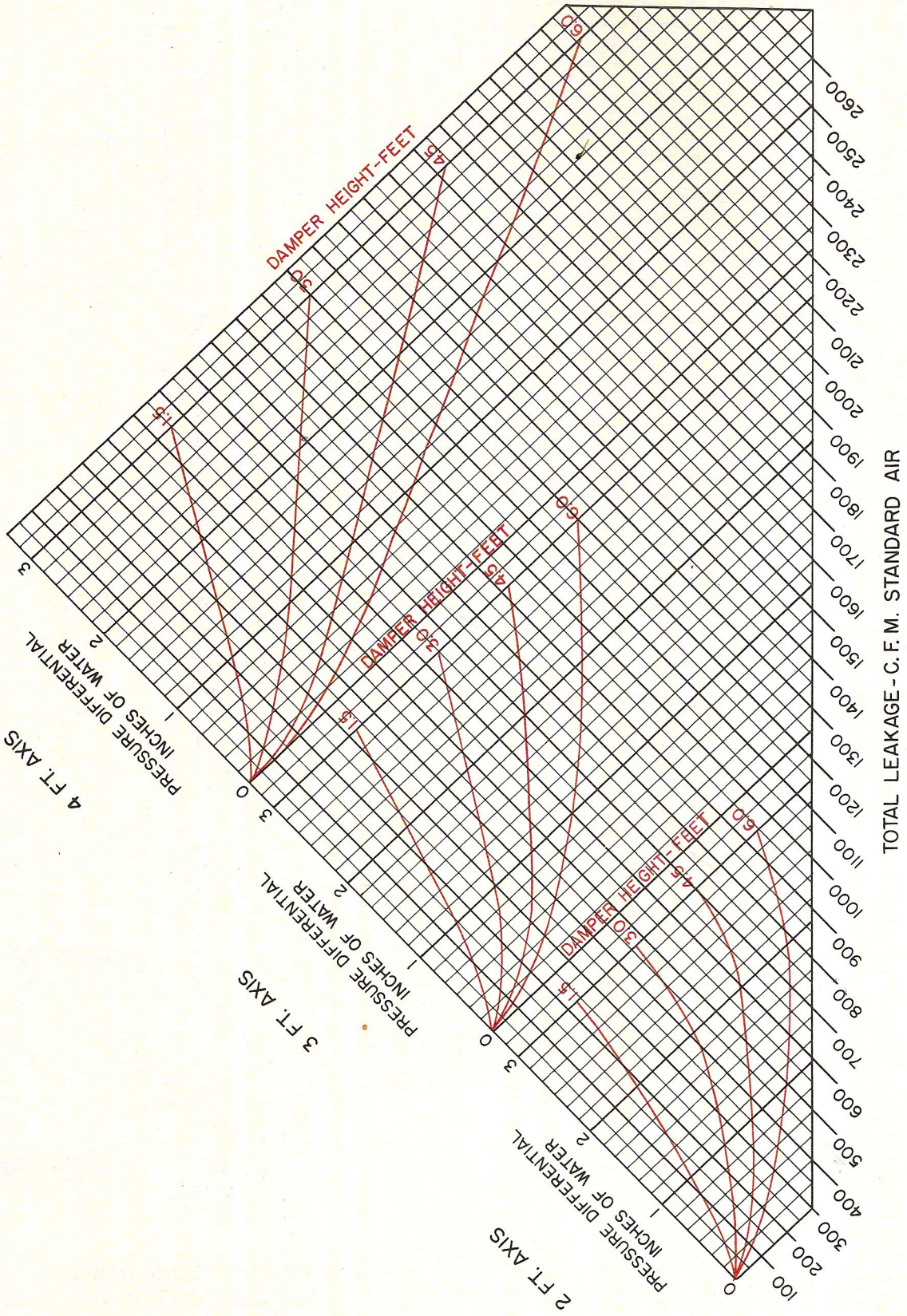

CHART 2
AIR LEAKAGE THROUGH PROPORTIONING DAMPERS

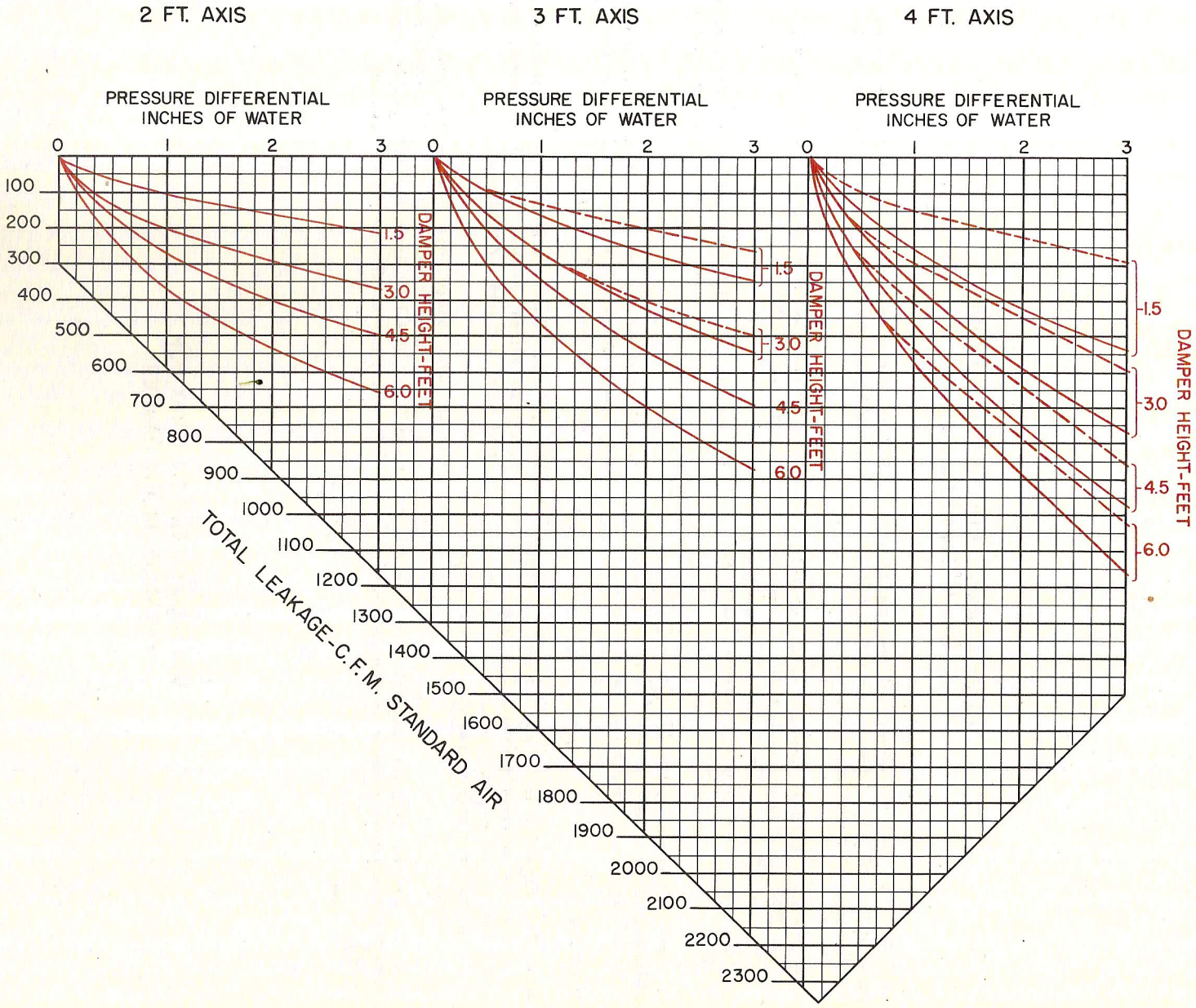

FLOW CHARACTERISTICS OF DAMPERS
Use of Charts 3 and 4

EXAMPLE 1: To find the differential pressure of a proportioning multi-louver damper open 60° with a duct velocity of 2000 fpm, proceed as follows:

On the "Velocity Entering Damper" scale, Chart 3, follow the 2000 fpm line vertically until it intersects the 60° curve. Project this point of intersection horizontally to the differential pressure scale and read 1.2.

Thus, the differential pressure of a multi-louver proportioning damper with a duct velocity of 2000 fpm and 60° open is 1.2 inches of water.

EXAMPLE 2:

Note: The following tools are required. A Draft gage to measure pressure drop across the damper and a protractor or other device to measure the angular position of the damper blades.

To find the position (angular opening) of a 4' x 4' proportioning multi-louver damper to satisfy minimum 30 per cent outdoor air requirements of a system requiring 32,000 cfm at full flow, proceed as follows:

Since the rated flow = 32,000 cfm, the entering Velocity is 2,000 fpm $\left(\frac{32,000}{4 \times 4}\right)$

30 per cent of 2000 fpm = 600 fpm. (The required damper position must be determined by trial and error.)

Try 30° open damper and measure the static pressure drop across damper (P = 1.75" water). From Chart 3, 30° and 1.75" water "V" = 440 fpm.

Try 40° open damper and measure the static pressure drop across damper. (P = 1.14" water) From Chart 3, 40° and 1.14", V = 680 fpm.

Try 35° open damper and measure the static pressure drop across damper. (P = 1.5" water) From Chart 3, 35° and 1.5" water, V = 600 fpm. Set damper minimum position at 35° from closed position.

USE CHART 4 THE SAME WAY FOR PARALLEL BLADE DAMPERS

CHART 3
FLOW CHARACTERISTICS OF MULTI-LOUVER PROPORTIONING DAMPER

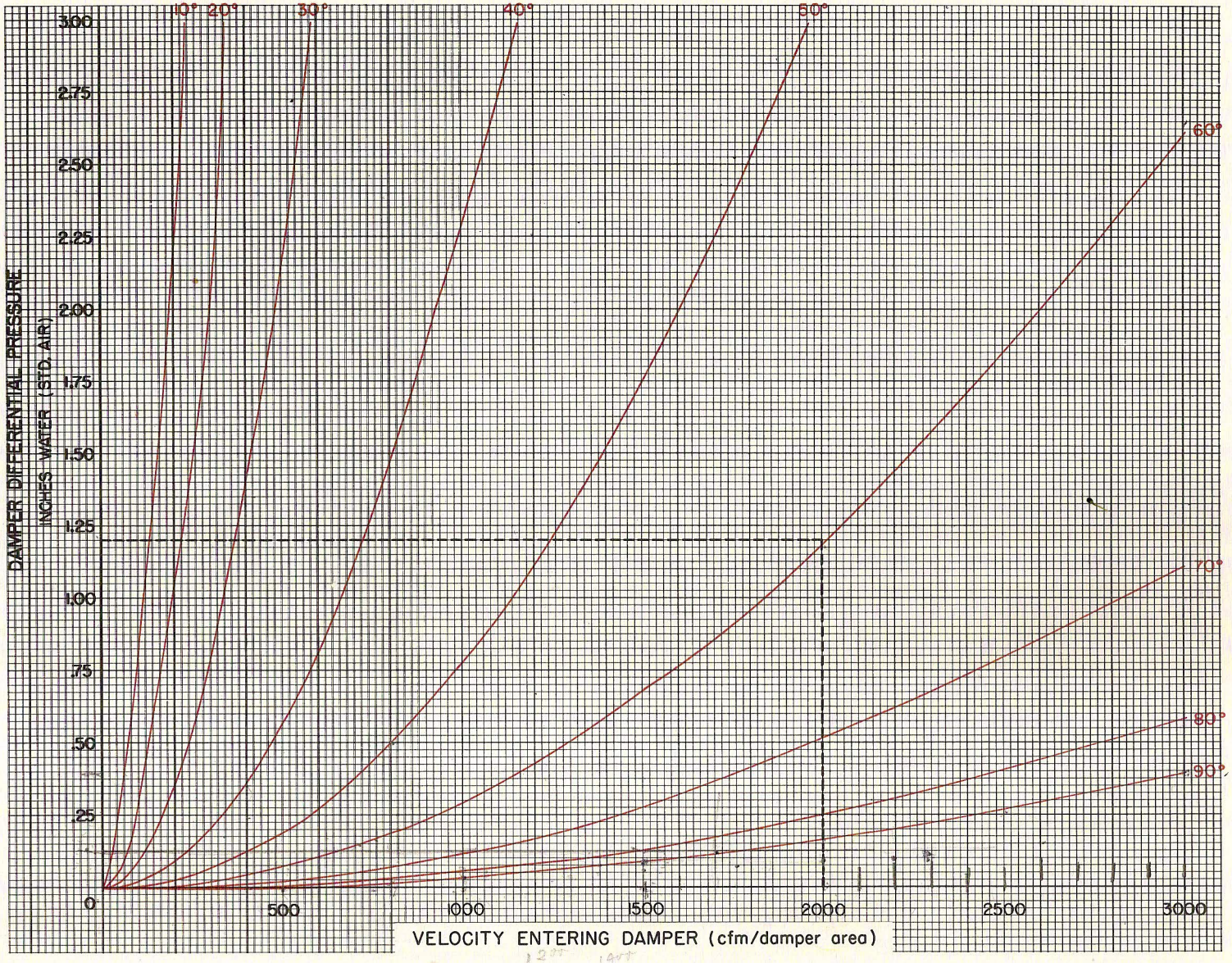

CHART 4
FLOW CHARACTERISTICS OF MULTI-LOUVER PARALLEL DAMPERS