Bulletin BX-512E

Bell & Gossett

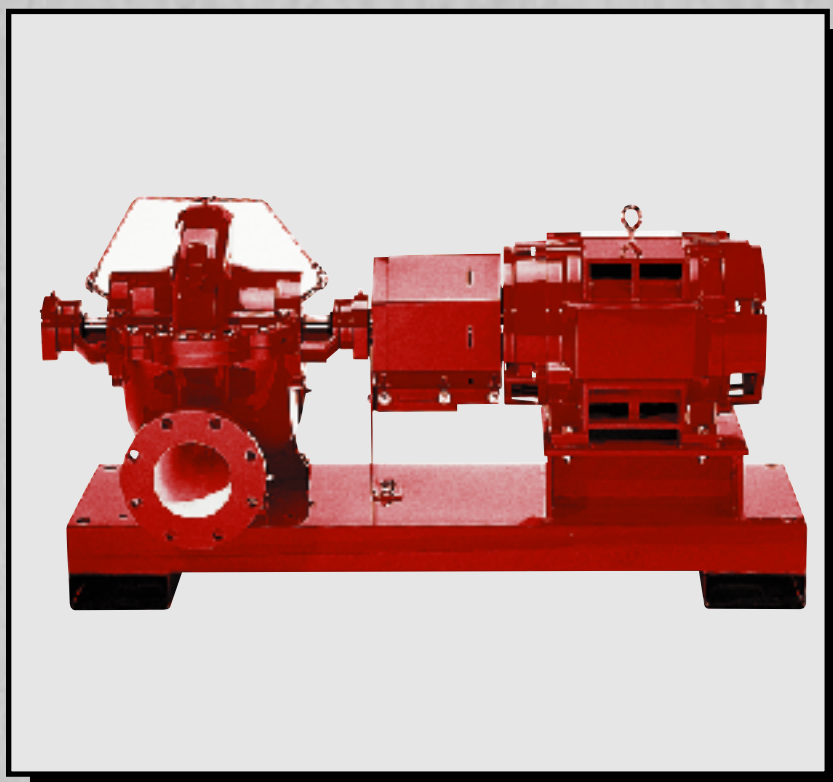

Series HSC-S Pumps Technical Bulletin

Part of the ESP PLUS Equipment Selection Programs

Bell & Gossett

ITT Industries
Engineered for life

TABLE OF CONTENTS

Useful Pump Formulas 2
60 Cycle Performance Curves 3
50 Cycle Performance Curves 4
Materials of Construction (Standard) 5
Materials of Construction (Optional) 6
Pump Dimensions 7-9
Typical Specifications 10

USEFUL PUMP FORMULAS

Pressure (PSI)	=	$\frac{\text{Head (Feet) x Specific Gravity}}{2.31}$
Head (Feet)	=	$\frac{\text{Pressure (PSI) x 2.31}}{\text{Specific Gravity}}$
Vacuum (Inches of Mercury)	=	Dynamic Suction Lift (Feet) x .883 x Specific Gravity
Horsepower (Brake)	=	$\frac{\text{GPM x Head (Feet) x Specific Gravity}}{\text{3960 x Pump Efficiency}}$
Horsepower (Water)	=	$\frac{\text{GPM x Head (Feet) x Specific Gravity}}{3960}$
Efficiency (Pump)	=	$\frac{\text{Horsepower (Water)}}{\text{Horsepower (Brake)}}$ x 100 Per Cent
NPSH (Available)	=	Positive Factors – Negative Factors

Affinity Laws: Effect of change of speed or impeller diameter on centrifugal pumps.

	GPM Capacity	Ft. Head	BHP
Impeller Diameter Change	$Q_2 = \frac{D_2}{D_1} Q_1$	$H_2 = \left(\frac{D_2}{D_1}\right)^2 H_1$	$P_2 = \left(\frac{D_2}{D_1}\right)^3 P_1$
Speed Change	$Q_2 = \frac{RPM_2}{RPM_1} Q_1$	$H_2 = \left(\frac{RPM_2}{RPM_1}\right)^2 H_1$	$P_2 = \left(\frac{RPM_2}{RPM_1}\right)^3 P_1$

Where Q = GPM, H = Head, P = BHP, D = Impeller Dia., RPM = Pump Speed

60 CYCLE PERFORMANCE CURVES – SERIES HSC-S

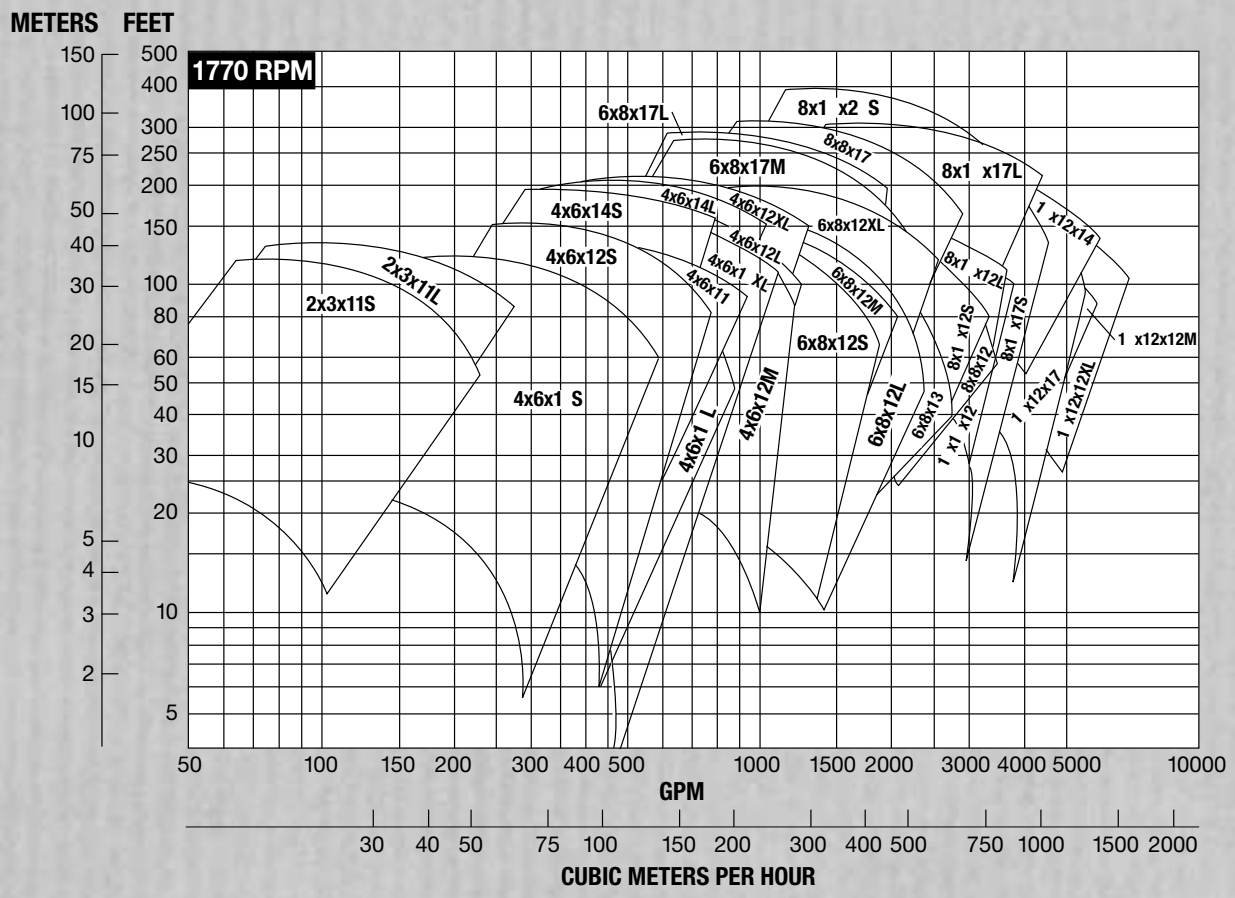

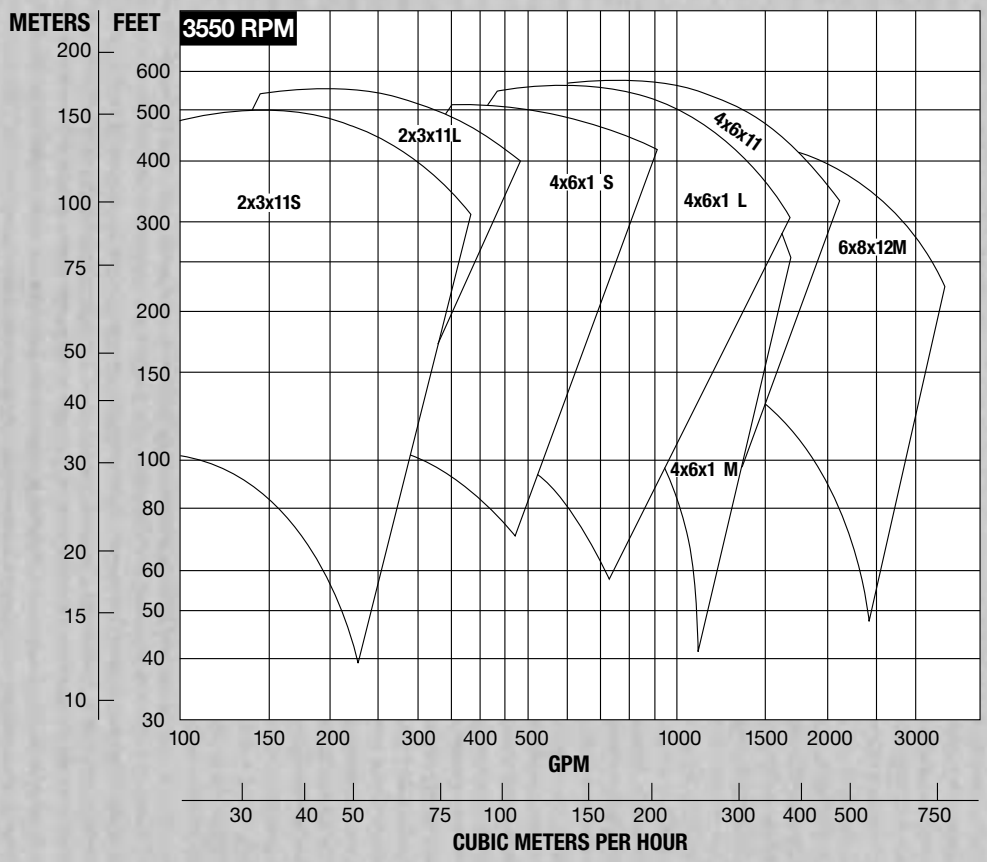

50 CYCLE PERFORMANCE CURVES – SERIES HSC-S

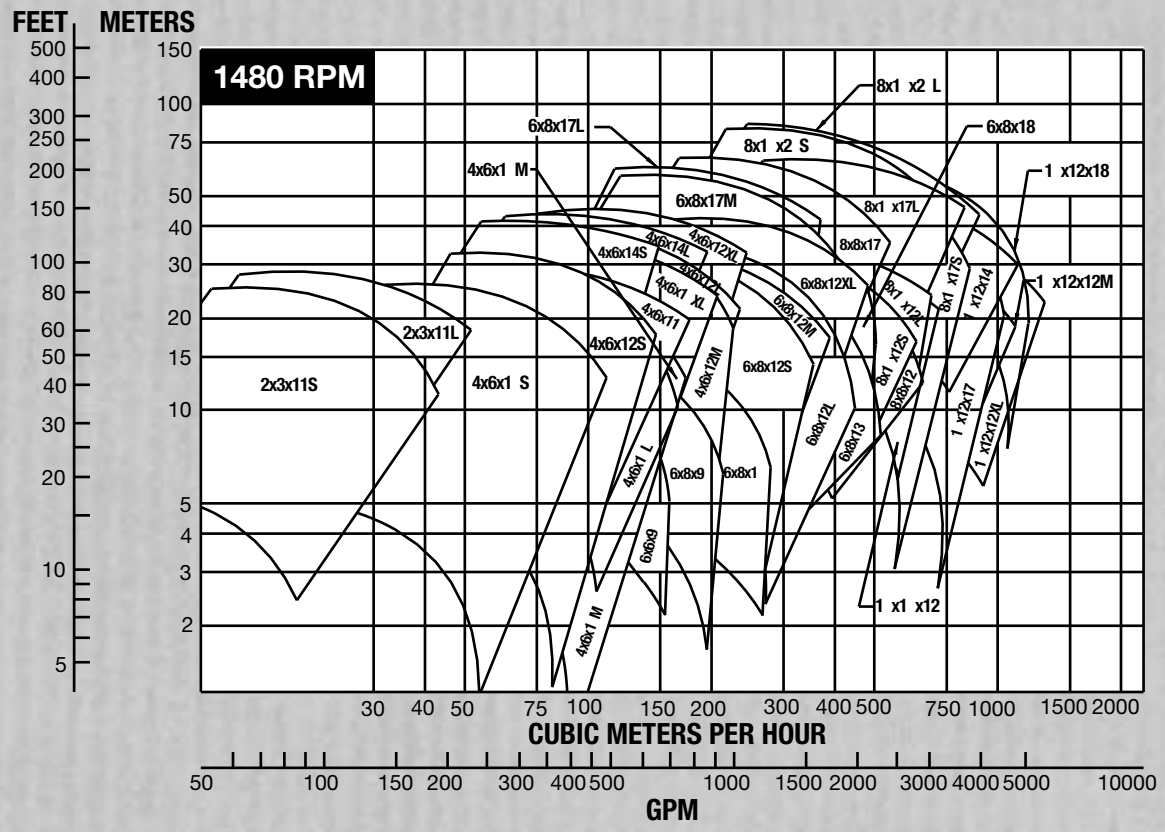

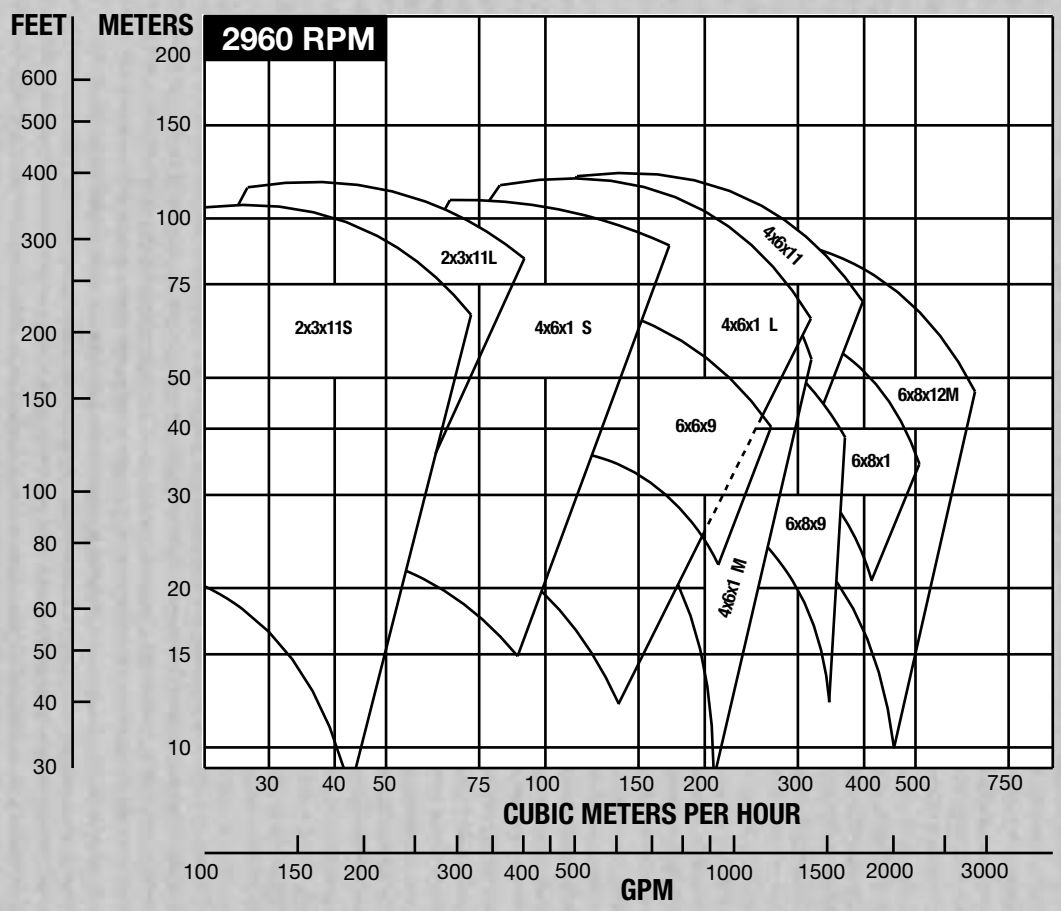

SERIES HSC-S MATERIALS OF CONSTRUCTION

MECHANICAL SEALS MOUNTED ON SHAFT

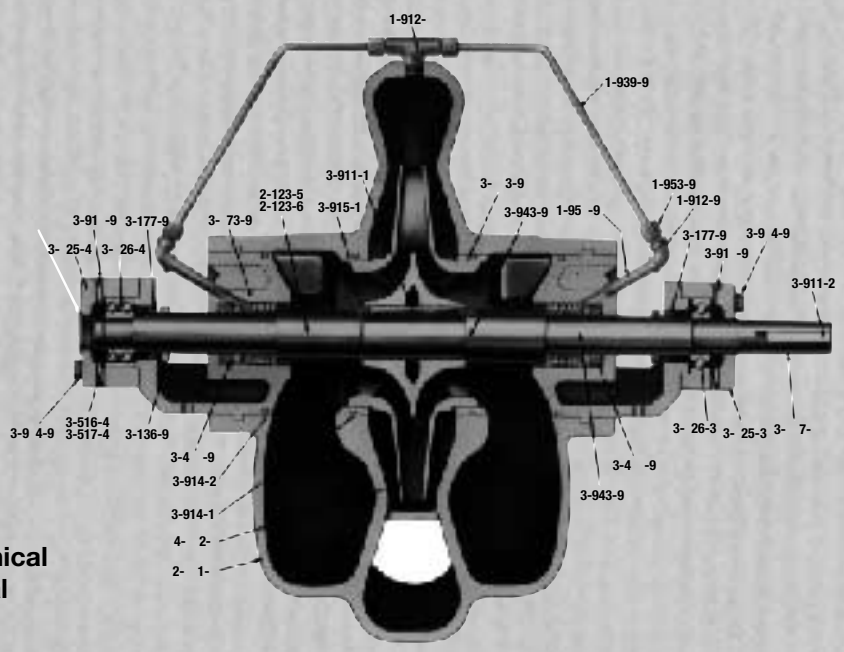

Standard Mechanical Seal with External Seal Piping.

NO.	DESCRIPTION	MATERIAL
		Cast Iron, Bronze Fitted
1-912-0	Pipe Fitting (Casing)	Brass
1-912-9	90° Elbow	Malleable Iron
1-939-9	Tubing	Copper
1-950-9	Nipple	Malleable Iron
1-953-9	Male Connector	Brass
2-001-0	Casing Assembly	Cast Iron (ASTM A48 Class 35A)
2-123-5	Casing Joint Gasket (Suction)	Paper (Vellumoid 505)
2-123-6	Casing Joint Gasket (Discharge)	Paper (Vellumoid 505)
3-003-9	Casing Ring	Bronze (ASTM B584-932)
3-007-0	Shaft	416 Stn. Stl.
3-025-3	Bearing Housing	Cast Iron (ASTM A48 Class 25A)
3-025-4	Bearing Housing	Cast Iron (ASTM A48 Class 25A)
3-026-3	Bearing (Inboard) Ball	Steel
3-026-4	Bearing (Outboard) Ball	Steel
3-073-9	Stuffing Box (Mechanical Seal)	Cast Iron (ASTM A48 Class 25A)
3-136-9	Deflector	Rubber (BUNA “N”)
3-177-9	Lip Seal (Bearing)	Rubber (BUNA “N”)
3-400-9	Mechanical Seal (See copy at right)	Stn. Stl., Rubber, Carbon, Ceramic
3-904-9	Capscrew (Bearing Housing)	Steel, Grade 2
3-910-9	Pipe Plugs (Bearing Housing)	Steel
3-911-1	Key, Impeller	Stn., Stl. (ANSI 416)
3-911-2	Key, Coupling	Steel
3-914-1	“O” Ring (Casing Ring)	Rubber (Buna “N”)
3-914-2	“O” Ring (Stuffing Box)	Rubber (Buna “N”)
3-915-1	Retaining Ring (Impeller)	Steel
3-516-4	Locknut (Bearing)	Steel
3-517-4	Lockwasher (Bearing)	Steel
3-943-9	Spirol Pin (Stuffing Box)	304 SS
3-943-9	Spirol Pin (Casing Ring)	304 SS
4-002-0	Impeller	Bronze (ASTM B584-875)
OPTIONAL COMPONENTS*		
4-004-9	Rings, Impeller	Bronze (ASTM B505-925)

*Optional modifications available, if specified, at extra cost. Located at casing parting line.
For 280 (19 BAR) and 400 psi (27 BAR) working pressures, casing materials is Ductile iron (ASTM A536, Grade 65-45-12).
(Note: Mechanical seals on shaft arrangement not available on pump sizes 6x8x12M, 8x10x20S, and 8x10x20L.)

Note: For pumps with 400 PSI (27 BAR) working pressure, wear ring clearances are doubled. Derate pump efficiencies by 2 percentage points.

MECHANICAL SEALS

STANDARD CONSTRUCTION:
175 PSIG (12 BAR) Maximum Working Pressure
75 PSIG (5 BAR) Maximum Suction Pressure
125#FF ANSI FLANGE (ANSI A21.10, AWWA C110 and ANSI B16.1 class 125)
Crane Type 21, Buna/Carbon-Ceramic, 75 psig (5 BAR) maximum suction pressure, from -20 to 225°F (-29 to 107°C)
Optional Seals:
Crane Type 21, EPT/Carbon-Ceramic, 75 psig (5 BAR) maximum suction pressure, from -20 to 250°F (-29 to 121°C)
Crane Type 21, EPT/Carbon-Tungsten Carbide, 75 psig (5 BAR) maximum suction pressure, from -20 to 250°F (-29 to 121°C)

OPTIONAL CONSTRUCTION:
280 PSIG (19 BAR) Maximum Working Pressure
200 PSIG (13 BAR) Maximum Suction Pressure
250#FF ANSI FLANGE (ANSI B16.1 class 250 except flanges are flat faced)
Crane Type 1, Buna/Carbon-Ceramic, 150 psig (10 BAR) maximum suction pressure, from -20 to 225°F (-29 to 107°F)
Optional Seals:
Crane Type 1, EPT/Carbon-Ceramic, 150 psig (10 BAR) maximum suction pressure, from -20 to 250°F (-29 to 121°C)
Crane Type 1, EPT/Carbon-Tungsten Carbide, 200 psig (13 BAR) maximum suction pressure, from -20 to 250°F (-29 to 121°C)

400 PSIG (27 BAR) Maximum Working Pressure
300 PSIG (20 BAR) Maximum Suction Pressure
250#FF ANSI FLANGE (ANSI B16.1 class 250 except flanges are flat faced)
Crane Type 1B, Buna/Carbon-Ceramic, 300 psig (20 BAR) maximum suction pressure, from -20 to 225°F (-29 to 107°F)
Optional Seals:
Crane Type 1B, EPT/Carbon-Ceramic, 300 psig (20 BAR) maximum suction pressure, from -20 to 250°F (-29 to 121°C)
Crane Type 1B, EPT/Carbon-Tungsten Carbide, 300 psig (20 BAR) maximum suction pressure, from -20 to 250°F (-29 to 121°C)

SERIES HSC-S MATERIALS OF CONSTRUCTION

MECHANICAL SEALS MOUNTED ON SLEEVE

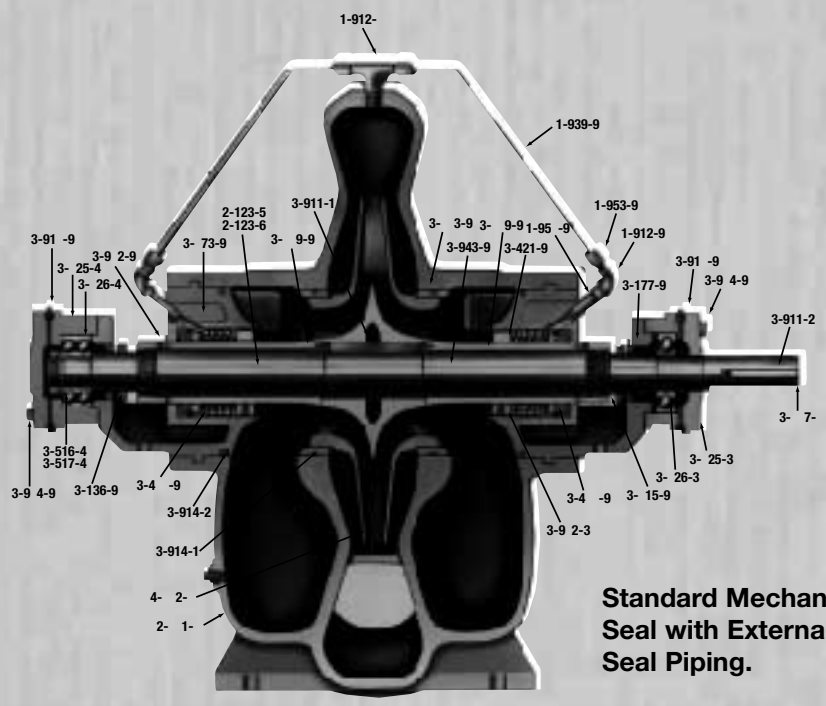

Standard Mechanical Seal with External Seal Piping.

NO.	DESCRIPTION	MATERIAL
		Cast Iron, Bronze Fitted
1-912-0	Pipe Fitting (Casing)	Brass
1-912-9	90° Elbow	Malleable Iron
1-939-9	Tubing	Copper
1-950-9	Nipple	Malleable Iron
1-953-9	Male Connector	Brass
2-001-0	Casing Assembly	Cast Iron (ASTM A48 Class 35A)
2-123-5	Casing Joint Gasket (Suction)	Paper (Vellumoid 505)
2-123-6	Casing Joint Gasket (Discharge)	Paper (Vellumoid 505)
3-003-9	Casing Ring	Bronze (ASTM B584-932)
3-007-0	Shaft	Steel (SAE 1045)
3-009-9	Shaft Sleeve	Bronze (ASTM B584-932)
3-015-9	Shaft Sleeve Nut	Bronze (ASTM B584-932)
3-902-9	Screw, Locking (Set Screw)	Steel
3-025-3	Bearing Housing	Cast Iron (ASTM A48 Class 25A)
3-025-4	Bearing Housing	Cast Iron (ASTM A48 Class 25A)
3-026-3	Bearing (Inboard) Ball	Steel
3-026-4	Bearing (Outboard) Ball	Steel
3-073-9	Stuffing Box (Mechanical Seal)	Cast Iron (ASTM A48 Class 25A)
3-136-9	Deflector	Rubber (BUNA "N")
3-177-9	Lip Seal (Bearing)	Rubber (BUNA "N")
3-400-9	Mechanical Seal (See copy at right)	Stn. Stl., Rubber, Carbon, Ceramic
3-421-9	Set Collar	Bronze (ASTM B584-932)
3-902-3	Set Screw	304 SS
3-904-9	Capscrew (Bearing Housing)	Steel, Grade 2
3-910-9	Pipe Plugs (Bearing Housing)	Steel
3-911-1	Key, Impeller	Steel
3-911-2	Key, Coupling	Steel
3-914-1	"O" Ring (Casing Ring)	Rubber (Buna "N")
3-914-2	"O" Ring (Stuffing Box)	Rubber (Buna "N")
3-516-4	Locknut (Bearing)	Steel
3-517-4	Lockwasher (Bearing)	Steel
3-943-9	Spirol Pin (Stuffing Box)	304 SS
3-943-9	Spirol Pin (Casing Ring)	304 SS
4-002-0	Impeller	Bronze (ASTM B584-875)
OPTIONAL COMPONENTS*		
4-004-9	Rings, Impeller	Bronze (ASTM B505-925)
3-400-9	Mechanical Seal Balanced	Stn. Stl., Rubber, Carbon, Ceramic

*Optional modifications available, if specified, at extra cost.
Located at casing parting line.
For 280 (19 BAR) and 400 psi (27 BAR) working pressures, casing materials is Ductile iron (ASTM A536, Grade 65-45-12).

Shaft material AISI 4140 on pump 4x6x11, 6x8x12M, 8x10x20S, 8x10x20L.

Note: For pumps with 400 PSI (27 BAR) working pressure, wear ring clearances are doubled. Derate pump efficiencies by 2 percentage points.

MECHANICAL SEALS

STANDARD CONSTRUCTION:
175 PSIG (12 BAR) Maximum Working Pressure
75 PSIG (5 BAR) Maximum Suction Pressure
125#FF ANSI FLANGE (ANSI A21.10, AWWA C110 and ANSI B16.1 class 125)
Crane Type 21, Buna/Carbon-Ceramic, 75 psig (5 BAR) maximum suction pressure, from -20 to 225°F (-29 to 107°C)
Optional Seals:
Crane Type 21, EPT/Carbon-Ceramic, 75 psig (5 BAR) maximum suction pressure, from -20 to 250°F (-29 to 121°C)
Crane Type 21, EPT/Carbon-Tungsten Carbide, 75 psig (5 BAR) maximum suction pressure, from -20 to 250°F (-29 to 121°C)
Packing, 75 PSIG (5 BAR) maximum working pressure, 0 to 225°F (-18 to 107°C)

OPTIONAL CONSTRUCTION:
280 PSIG (19 BAR) Maximum Working Pressure
200 PSIG (13 BAR) Maximum Suction Pressure
250#FF ANSI FLANGE (ANSI B16.1 class 250 except flanges are flat faced)
Crane Type 1, Buna/Carbon-Ceramic, 150 psig (10 BAR) maximum suction pressure, from -20 to 225°F (-29 to 107°F)
Optional Seals:
Crane Type 1, EPT/Carbon-Ceramic, 150 psig (10 BAR) maximum suction pressure, from -20 to 250°F (-29 to 121°C)
Crane Type 1, EPT/Carbon-Tungsten Carbide, 200 psig (13 BAR) maximum suction pressure, from -20 to 250°F (-29 to 121°C)

400 PSIG (27 BAR) Maximum Working Pressure
300 PSIG (20 BAR) Maximum Suction Pressure
250#FF ANSI FLANGE (ANSI B16.1 class 250 except flanges are flat faced)
Crane Type 1B, Buna/Carbon-Ceramic, 300 psig (20 BAR) maximum suction pressure, from -20 to 225°F (-29 to 107°F)
Optional Seals:
Crane Type 1B, EPT/Carbon-Ceramic, 300 psig (20 BAR) maximum suction pressure, from -20 to 250°F (-29 to 121°C)
Crane Type 1B, EPT/Carbon-Tungsten Carbide, 300 psig (20 BAR) maximum suction pressure, from -20 to 250°F (-29 to 121°C)

SERIES HSC-S MODEL 150 DIMENSIONS

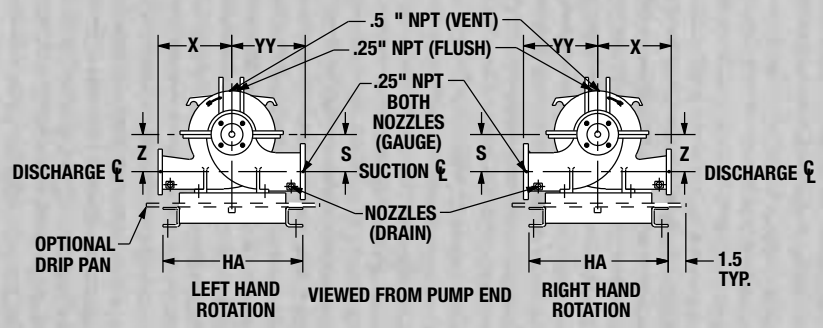

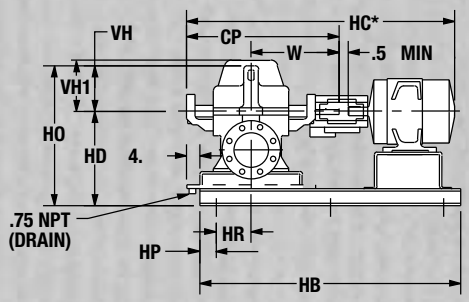

STANDARD: 125#FF ANSI FLANGE (ANSI A21.10, AWWA C110 & ANSI B16.1 CLASS 125)
OPTIONAL: 250#FF ANSI FLANGE (ANSI B16.1 CLASS 250 EXCEPT FLANGES ARE FLAT FACED)
VH1 APPLIES TO 280 (19 BAR) & 400 PSIG (27 BAR) RIBBED CASINGS.
DIMENSIONS ARE SUBJECT TO CHANGE. NOT TO BE USED FOR CONSTRUCTION PURPOSES UNLESS CERTIFIED.
*MOTOR DIMENSIONS ARE APPROXIMATE FOR "T" FRAMES, VARY BY MANUFACTURER AND MOTOR TYPE.

PUMP SIZE	MOTOR FRAME	DIMENSIONS – INCHES (MM)													
		HA	HB	HP	HR	CP	HC* MAX	HD	HO	S & Z	VH	VH1	W	X	YY
2x3x11	143-215	20.00	48.00 (1219)	6.00	2.25	28.25	47 (1194)	15.25(388)	22.05 (560)	5.50	6.80	–	16.00	9.00	10.00
S, L	254-365	(508)	54.00 (1372)	(152)	(57)	(718)	61 (1549)			(140)	(173)		(406)	(229)	(254)
	182-215		48.00 (1219)				53 (1346)								
4x6x10	254-326	24.00	58.00 (1473)	6.00	4.62	33.12	63 (1600)	18.25 (464)	26.12 (664)	6.50	7.88	–	18.50	11.50	13.00
S, M, L, XL	364-405	(610)	64.00 (1626)	(152)	(117)	(841)	72 (1829)			(165)	(200)		(470)	(292)	(330)
	444-445		76.00 (1930)				78 (1981)	20.25 (514)	28.12 (714)						
	182-215		48.00 (1219)				53 (1346)								
4x6x11	254-326	24.00	58.00 (1473)	6.00	4.62	33.12	63 (1600)	18.25 (464)	26.81 (681)	738	8.56	–	18.50	11.50	13.00
	364-405	(610)	64.00 (1626)	(152)	(117)	(841)	72 (1829)			(188)	(218)		(470)	(292)	(330)
	444-445		76.00 (1930)				78 (1981)	20.25 (514)	28.81 (732)						
4x6x12	182-256	24.00	50.00 (1270)	6.00	3.25	30.75	55 (1397)	19.25 (489)	28.45 (723)	7.75	9.20	–	17.50	11.50	13.00
S, M, L, XL	284-365	(610)	58.00 (1473)	(152)	(83)	(781)	64 (1626)			(197)	(234)		(445)	(292)	(330)
4x6x14	182-256	24.00	50.00 (1270)	6.00	3.25	30.75	55 (1397)	19.25 (489)	28.87 (733)	7.75	9.62	–	17.50	11.50	13.00
S, L	284-365	(610)	58.00 (1473)	(152)	(83)	(781)	64 (1626)			(197)	(244)		(445)	(292)	(330)
	182-215		48.00 (1219)				51 (1296)								
6x8x12	254-326	21.50	54.00 (1372)	6.00	3.25	30.75	61 (1549)	21.25 (540)	30.85 (784)	9.00	9.60	–	17.50	14.00	14.00
S, L, XL	364-365	(546)	60.00 (1524)	(152)	(83)	(781)	64 (1626)			(229)	(244)		(445)	(356)	(356)
	254-326		58.00 (1473)				63 (1600)								
6x8x12M	364-405	24.00	64.00 (1626)	6.00	4.63	33.12	72 (1829)	21.25 (540)	30.85 (783)	9.00	9.60	–	18.50	14.00	14.00
	444-447	(610)	76.00 (1930)	(152)	(118)	(841)	81 (2058)	23.25 (591)	32.85 (834)	(229)	(244)		(470)	(356)	(356)
6x8x13	254-326	24.00	62.00 (1575)	6.00	5.63	36.87	67 (1702)	20.00 (508)	29.40 (747)	8.00	9.40	–	21.25	13.00	15.50
	364-405	(610)	68.00 (1727)	(152)	(143)	(937)	76 (1930)			(203)	(239)		(540)	(330)	(394)
	284-326		62.00 (1575)				67 (1702)								
6x8x17	364-405	24.00	68.00 (1727)	6.00	5.63	36.87	76 (1930)	21.25 (540)	33.00 (838)	9.00	11.75	–	21.25	14.00	16.00
M, L	444-445	(610)	76.00 (1930)	(152)	(143)	(937)	82 (2083)			(229)	(299)		(540)	(356)	(406)
8x8x12	254-326	24.00	62.00 (1575)	6.00	5.63	36.87	67 (1702)	20.00 (508)	30.25 (768)	8.00	10.25	11.75	21.25	14.00	16.50
	364-405	(610)	68.00 (1727)	(152)	(143)	(937)	76 (1930)			(203)	(260)	(299)	(540)	(356)	(419)
	324-365		66.00 (1676)				72 (1829)	21.75 (553)	33.75 (857)						
8x8x17	404-445	24.00	76.00 (1930)	6.00	7.00	39.56	85 (2159)	23.75 (603)	35.75 (908)	9.50	12.00	13.50	22.56	15.00	16.50
	447-449	(610)	86.00 (2184)	(152)	(178)	(1005)	93 (2362)			(241)	(305)	(343)	(573)	(381)	(419)
8x10x12	254-286	24.00	62.00 (1575)	6.00	7.00	39.56	67 (1702)	21.50 (546)	32.00 (813)	8.50	10.50	12.00	22.56	14.00	17.00
S, L	324-365	(610)	66.00 (1676)	(152)	(178)	(1005)	72 (1829)			(216)	(267)	(305)	(573)	(356)	(432)
	404-445		76.00 (1930)				85 (2159)	23.50 (597)	34.00 (864)						
8x10x17	324-365	24.00	66.00 (1676)	6.00	7.00	39.56	72 (1829)	23.25 (591)	36.06 (916)	10.00	12.81	14.31	22.56	16.00	18.00
S, L	404-445	(610)	76.00 (1930)	(152)	(178)	(1005)	85 (2159)	25.25 (641)	38.06 (967)	(254)	(325)	(363)	(573)	(406)	(457)
	447-449		86.00 (2184)				93 (2362)								
8x10x20	324-365	26.00	66.00 (1676)	6.00	7.00	39.56	72 (1829)	27.25 (692)	49.50 (1257)	14.00	15.44	22.25	22.56	18.00	20.00
S, L	404-445	(660)	76.00 (1930)	(152)	(178)	(1005)	85 (2159)	29.25 (743)	51.50 (1308)	(356)	(392)	(565)	(573)	(457)	(508)
	447-449		86.00 (2184)				93 (2362)								
10x10x12	284-365	24.00	68.00 (1727)	6.00	8.50	42.56	75 (1905)	22.50 (572)	33.69 (656)	9.00	11.19	–	24.06	16.00	18.00
	404-445	(610)	80.00 (2032)	(152)	(216)	(1081)	96 (2438)	24.50 (622)	35.69 (907)	(229)	(284)		(611)	(406)	(457)
10x12x12	284-365	24.00	68.00 (1727)	6.00	8.50	42.56	75 (1905)	24.50 (622)	36.00 (914)	10.00	11.50	–	24.06	16.00	19.00
M, XL	404-445	(610)	80.00 (2032)	(152)	(216)	(1081)	96 (2438)	26.50 (673)	38.00 (965)	(254)	(292)		(611)	(406)	(483)
	324-365		66.00 (1676)				72 (1829)	25.25 (641)	38.69 (983)						
10x12x14	404-445	24.00	76.00 (1930)	6.00	7.00	39.56	85 (2159)	27.25 (692)	40.69 (1034)	11.00	13.44	14.94	22.56	18.00	20.00
	447-449	(610)	86.00 (2184)	(152)	(178)	(1005)	93 (2362)			(280)	(341)	(380)	(573)	(457)	(508)
	324-365		66.00 (1676)				72 (1829)	25.25 (641)	38.69 (983)						
10x12x17	404-445	24.00	76.00 (1930)	6.00	7.00	39.56	85 (2159)	27.25 (692)	40.69 (1034)	11.00	13.44	14.94	22.56	18.00	20.00
	447-449	(610)	86.00 (2184)	(152)	(178)	(1005)	93 (2362)			(280)	(341)	(380)	(573)	(457)	(508)

SERIES HSC-S MODEL 300 DIMENSIONS

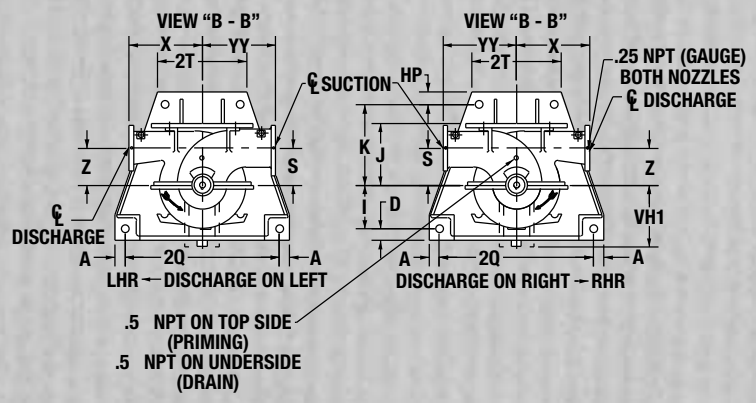

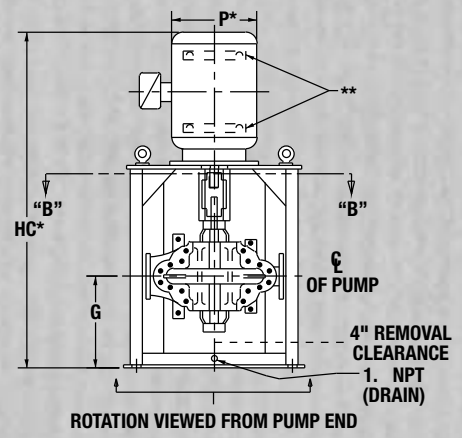

STANDARD: 125#FF ANSI FLANGE (ANSI A21.10, AWWA C110 & ANSI B16.1 CLASS 125)
OPTIONAL: 250#FF ANSI FLANGE (ANSI B16.1 CLASS 250 EXCEPT FLANGES ARE FLAT FACED)
VH1 APPLIES TO 280 (19 BAR) & 400 PSIG (27 BAR) RIBBED CASINGS.
DIMENSIONS ARE SUBJECT TO CHANGE. NOT TO BE USED FOR CONSTRUCTION PURPOSES UNLESS CERTIFIED.
*MOTOR DIMENSIONS ARE APPROXIMATE FOR NEMA FRAMES, VARY BY MANUFACTURER AND MOTOR TYPE.
**MOTORS MA .

PUMP SIZE	MOTOR FRAME	DIMENSIONS – INCHES (MM)														
		A	D	G	HP	I	J	K	2Q	2T	HC*MAX	P*MAX	S & Z	VH1	X	YY
2x3x11	143-365	1.50	1.25	16.50	1.50	6.75	8.12	11.50	26.50	10.50	65	19	5.50	–	9.00	10.00
S, L		(38)	(32)	(419)	(38)	(172)	(206)	(292)	(673)	(267)	(1651)	(483)	(140)		(229)	(254)
4x6x10	182-445	1.50	1.25	18.75	1.50	9.75	11.12	14.50	32.50	15.50	79	24	6.50	–	11.50	13.00
S, M, L, XL		(38)	(32)	(477)	(38)	(248)	(283)	(368)	(826)	(394)	(2007)	(610)	(165)		(292)	(330)
4x6x11	182-445	1.50	1.25	18.75	1.50	9.75	11.12	14.50	32.50	15.50	79	24	7.38	–	11.50	13.00
		(38)	(32)	(477)	(38)	(248)	(283)	(368)	(826)	(394)	(2007)	(610)	(188)		(292)	(330)
4x6x12	182-365	1.50	1.25	17.50	1.50	8.75	12.12	15.50	32.50	15.50	68	19	7.75	–	11.50	13.00
S, M, L, XL		(38)	(32)	(445)	(38)	(222)	(308)	(394)	(826)	(394)	(1727)	(483)	(197)		(292)	(330)
4x6x14	182-365	1.50	1.25	17.50	1.50	8.75	12.12	15.50	32.50	15.50	68	19	7.75	–	11.50	13.00
S, L		(38)	(32)	(445)	(38)	(222)	(308)	(394)	(826)	(394)	(1727)	(483)	(197)		(292)	(330)
6x8x12	182-365	1.50	1.25	17.50	1.50	9.25	Y BE SUPPLIED WITH FEET			15.50	68	19	9.00	–	14.00	14.00
S, L, XL		(38)	(32)	(445)	(38)	(235)	(359)	(445)	(876)	(394)	(1727)	(483)	(229)		(356)	(356)
6x8x12M	254-447	1.50	1.25	18.75	1.50	9.25	14.12	17.50	34.50	15.50	84	24	9.00	–	14.00	14.00
		(38)	(32)	(477)	(38)	(235)	(359)	(445)	(876)	(394)	(2134)	(610)	(229)		(356)	(356)
6x8x13	254-405	1.00	2.25	21.00	1.50	7.75	12.88	17.50	38.50	16.76	79	21	8.00	–	13.00	15.50
		(25)	(57)	(533)	(38)	(197)	(327)	(445)	(978)	(426)	(2007)	(533)	(203)		(330)	(394)
6x8x17	284-445	1.00	2.25	21.00	1.50	10.25	14.12	19.00	39.50	16.76	84	24	9.00	–	14.00	16.00
M, L		(25)	(57)	(533)	(38)	(260)	(359)	(483)	(1003)	(426)	(2134)	(610)	(229)		(356)	(406)
8x8x12	254-405	1.00	2.25	21.00	1.50	8.25	12.88	17.50	40.50	16.76	79	21	8.00	11.75	14.00	16.50
		(25)	(57)	(533)	(38)	(210)	(327)	(445)	(1029)	(426)	(2007)	(533)	(203)	(299)	(356)	(419)
8x8x17	324-449	1.00	2.25	22.50	1.50	10.50	14.62	19.25	40.50	18.50	108	27	9.50	13.50	15.00	16.50
		(25)	(57)	(572)	(38)	(267)	(371)	(489)	(1029)	(470)	(2473)	(686)	(241)	(343)	(381)	(419)
8x10x12	254-445	1.00	2.25	22.50	1.50	10.12	14.38	19.12	41.50	18.50	87	24	8.50	12.00	14.00	17.00
S, L		(25)	(57)	(572)	(38)	(257)	(365)	(486)	(1054)	(470)	(2210)	(610)	(216)	(305)	(356)	(432)
8x10x17	324-449	1.00	2.25	22.50	1.50	11.38	16.12	20.88	43.50	18.50	108	27	10.00	14.31	16.00	18.00
S, L		(25)	(57)	(572)	(38)	(289)	(410)	(530)	(1105)	(470)	(2743)	(686)	(254)	(363)	(406)	(457)
8x10x20	324-449	1.00	2.25	22.50	1.50	20.75	20.12	24.88	47.50	20.50	108	27	14.00	22.25	18.00	20.00
S, L		(25)	(57)	(572)	(38)	(527)	(511)	(632)	(1207)	(521)	(2743)	(686)	(356)	(565)	(457)	(508)
10x10x12	284-445	1.00	2.25	24.00	1.50	9.75	14.88	19.50	43.50	18.50	87	24	9.00	–	16.00	18.00
		(25)	(57)	(610)	(38)	(248)	(378)	(495)	(1105)	(470)	(2210)	(610)	(229)		(406)	(457)
10x12x12	284-445	1.00	2.25	24.00	1.50	9.88	16.88	21.38	45.50	18.50	87	24	10.00	–	16.00	19.00
M, XL		(25)	(57)	(610)	(38)	(251)	(429)	(543)	(1156)	(470)	(2210)	(610)	(254)		(406)	(483)
10x12x14	324-449	1.00	2.25	22.50	1.50	11.88	18.12	22.88	47.50	18.50	108	27	11.00	14.94	18.00	20.00
		(25)	(57)	(572)	(38)	(302)	(460)	(581)	(1207)	(470)	(2743)	(686)	(279)	(380)	(457)	(508)
10x12x17	324-449	1.00	2.25	22.50	1.50	11.88	18.12	22.88	47.50	18.50	108	27	11.00	14.94	18.00	20.00
		(25)	(57)	(572)	(38)	(302)	(460)	(581)	(1207)	(470)	(2743)	(686)	(279)	(380)	(457)	(508)

SERIES HSC-S MODEL 100 DIMENSIONS

DOUBLE SUCTION WITH MECHANICAL SEALS OR PACKING

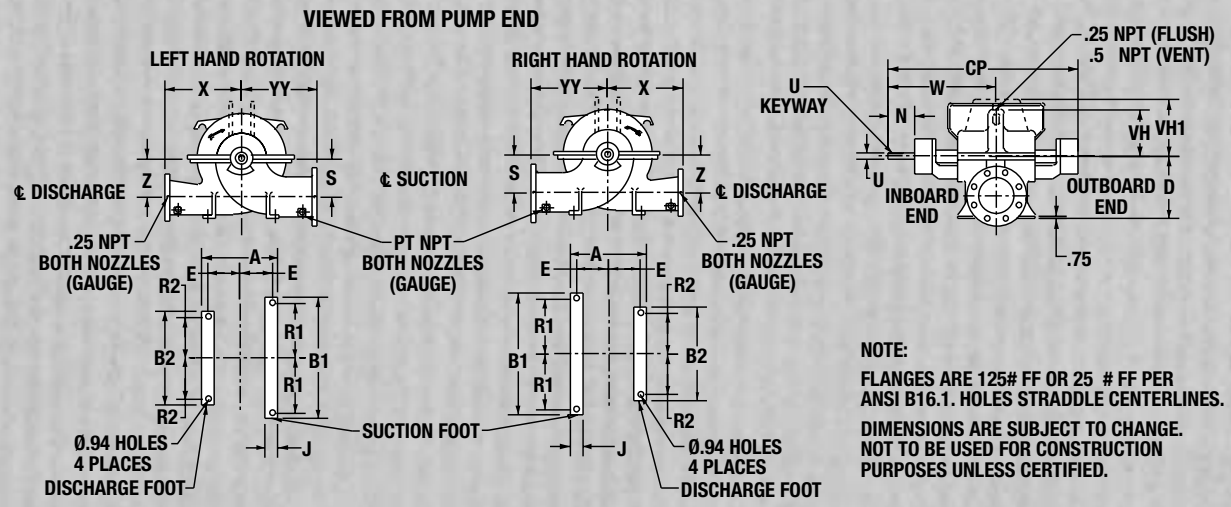

NOTE:

FLANGES ARE 125# FF OR 25 # FF PER ANSI B16.1. HOLES STRADDLE CENTERLINES.

DIMENSIONS ARE SUBJECT TO CHANGE. NOT TO BE USED FOR CONSTRUCTION PURPOSES UNLESS CERTIFIED.

PUMP FOOT DIMENSIONS

DIMENSIONS – INCHES (MM)

PUMP SIZE	DISCH	SUCT	A	B1	B2	E	J	R1	R2	CP	D	N	PT	S&Z	U .2	VH	VH1	W	X	YY	U-KEYWAY WIDTH +.2	U-KEYWAY DEPTH +.15
2x3x11 S, L	2.00 (51)	3.00 (76)	10.00 (254)	13.00 (330)	8.00 (203)	4.00 (102)	3.00 (76)	5.50 (140)	3.00 (76)	28.25 (718)	8.00 (203)	4.00 (102)	.75 (19)	5.50 (140)	1.125 (29)	6.80 (173)		16.00 (407)	9.00 (229)	10.00 (254)	.250 (6)	.125 (3)
4x6x10 S, M, L, XL							2.50 (64)			33.12 (841)	11.00 (279)			6.50 (165)	1.375 (35)	7.88 (200)		18.50 (470)			.312 (8)	.156 (4)
4x6x11	4.00 (102)	6.00 (152)												7.38 (188)		8.56 (218)			11.50 (292)	13.00 (330)		
4x6x12 S, M, L, XL			15.00 (381)	15.00 (381)	10.00 (254)	6.50 (165)		6.50 (165)	4.00 (102)		12.00 (305)	4.50 (114)		7.75 (197)		9.20 (234)						
4x6x14 S, L							3.50 (89)			30.75 (781)					1.125 (29)	9.62 (244)	–	17.50 (446)			.250 (6)	.125 (3)
6x8x12 S, L, XL											14.00 (356)			9.00 (229)		9.60 (244)			14.00 (356)	14.00 (356)		
6x8x12M	6.00 (152)									33.12 (841)		4.19 (107)						18.50 (470)				
6x8x13		8.00 (203)	16.25 (413)	18.50 (470)	10.50 (267)	7.12 (181)		8.25 (210)	4.25 (108)	36.87 (937)	12.75 (324)	5.94 (151)		8.00 (203)	1.375 (35)	9.40 (239)		21.25 (540)	13.00 (330)	15.50 (394)	.312 (8)	.156 (4)
6x8x17 M, L											14.00 (356)			9.00 (229)		11.75 (299)			14.00 (356)	16.00 (406)		
8x8x12											12.75 (324)		1.00 (25)	8.00 (203)		10.25 (260)	11.75 (299)			16.50 (419)		
8x8x17			18.00 (457)	20.00 (508)	12.00 (305)	8.00 (203)		9.00 (229)	5.00 (127)	39.56 (1005)	14.50 (368)	6.19 (157)		9.50 (241)	1.625 (41)	12.00 (305)	13.50 (343)	22.56 (573)	15.00 (381)		.375 (10)	.188 (5)
8x10x12 S, L	8.00 (203)	10.00 (254)					3.75 (95)				14.25 (362)			8.50 (216)		10.50 (267)	12.00 (305)		14.00 (356)	17.00 (432)		
8x10x17 S, L			20.00 (508)	22.00 (559)							16.00 (406)			10.00 (254)		12.81 (325)	14.31 (364)		16.00 (406)	18.00 (457)		
8x10x20 S, L						9.00 (229)		10.00 (254)	6.00 (152)	42.56 (1081)	20.00 (508)			14.00 (356)		15.44 (392)	22.25 (565)		18.00 (457)	20.00 (508)		
10x10x12			18.00 (457)		14.00 (356)						14.75 (375)			9.00 (229)		11.19 (284)	–	24.06 (611)	16.00 (406)	18.00 (457)		
10x12x12 M, XL	10.00 (254)	12.00 (305)				8.00 (203)					16.75 (426)			10.00 (254)		11.50 (292)				19.00 (483)		
10x12x14				20.00 (508)	12.00 (305)			9.00 (229)	5.00 (127)	39.56 (1005)	18.00 (457)			11.00 (279)		13.44 (341)	14.94 (380)	22.56 (573)	18.00 (457)	20.00 (508)		
10x12x17																						

Dimensions are subject to change. Not to be used for construction purposes unless certified.

TYPICAL SPECIFICATIONS FOR SERIES HSC-S HORIZONTAL SPLIT CASE PUMPS

SPECIFICATIONS

2.01 DOUBLE SUCTION, HORIZONTAL SPLIT CASE PUMPS (BASE MOUNTED)

A MANUFACTURER:
Contractor shall furnish and install new double suction horizontal split case pumps for chilled water and hot water heating systems as indicated on the drawings. Pumps shall be model HSC-S as manufactured by **Bell & Gossett** under base bid. Equivalent units may be submitted as deduct alternates. Pumps shall meet types, sizes, capacities, and characteristics as scheduled on the Equipment Schedule drawings.

B DOUBLE SUCTION, HORIZONTAL SPLIT CASE PUMP (BASE MOUNTED) :

1. The pumps shall be long coupled, base mounted, single stage, double suction, horizontally split case design, in cast iron bronze fitted construction specifically designed and guaranteed for quiet operation. Suitable standard operations at 225°F (107°C) and 175 psig (12 BAR) working pressure or optional operations at up to 250°F (121°C) and 280 (19 BAR) or 400 psig (27 BAR) working pressures. Working pressures shall not be de-rated at temperatures up to 250°F (121°C). The pump internals shall be capable of being serviced without disturbing piping connections or electrical motor connections.
2. A bearing housing shall supply support for a pair of heavy-duty regreaseable ball bearings. An inboard single row bearing will absorb thermal expansive forces while an outboard double row bearing will be clamped in place to absorb both radial and thrust loads and keep the rotating element in proper axial alignment. Bearings shall be replaceable without disturbing the system piping and shall be regreaseable without removal of the bearings from the bearing housing.
3. The impeller shaft shall be a solid 416 stainless steel shaft.
4. Pump shall be equipped with a pair of externally flushed mechanical seal assemblies in direct contact with the pump shaft. Seal assemblies shall be a John Crane #21 having a stainless steel housing, Buna bellows and seat gasket, stainless steel spring, and be of a carbon-ceramic design with the carbon face rotating against a stationary ceramic face.
5. Impeller shall be of the enclosed double suction type made of bronze, both hydraulically and dynamically balanced to ANSI/HI 1.1-1.5-1994, section 1.4.6.1.3.1, figure 1.106, balance grade G6.3 keyed to the shaft and fixed in the axial position.
6. A center drop-out type coupling, capable of absorbing torsional vibration, shall be employed between the pump and motor. On variable speed applications the coupler sleeve should be constructed of an EPDM material to maximize performance life.
7. The coupling shall be shielded by a dual rated ANSI B15.1, Section 8 and OSHA 1910.219 compliant coupling guard and contain viewing windows for inspection of the coupling.
8. Pump volute shall be of a cast iron (rated for 175 psig [12 BAR] Max WP) or ductile iron (rated for 280 [19 BAR] or 400 psig [27 BAR] Max WP) axially-split design with flanges (175 psig [12 BAR] drilled for 125# ANSI companion flanges or optional 280 [19 BAR] and 400 psig [27 BAR] working pressures are drilled 250# flange drilled) and mounting feet integral cast into the bottom half of the casing. Suction and discharge flanges shall be on a common centerline in both the horizontal and vertical planes, and the volute shall include Bronze Casing Wear Rings, priming port, gauge ports at nozzles, and vent and drain ports. The upper half casing shall be capable of being removed without disturbing piping connections or electrical motor connections.
9. Pump seal flushing lines shall be mounted on the upper half pump casing. Sealing from an external source shall be possible for lubrication and/or cooling.
10. Motors shall meet scheduled horsepower, speed, voltage, and enclosure design. Pump and motors shall be factory aligned, and shall be realigned after installation by the manufacturer's representative. Motors shall be non-overloading at any point on the pump curve and shall meet NEMA specifications and conform to the standards outlined in EPACT 92.
11. Base plate shall be of channel steel with sufficient rigidity to support pump and motor. The minimum base plate stiffness shall conform to ANSI/HI 1.3.4-1997 for *Horizontal Baseplate Design* standards.
12. Base shall be capable of being field grouted.
13. Pump rotation shall be righthand or lefthand as viewed from the pump end.
14. Pump manufacturer shall be ISO-9001 certified.
15. The seismic capability of the pump shall allow it to withstand a horizontal load of 0.5g, excluding piping and/or fasteners used to anchor the pump to mounting pads or to the floor, without adversely affecting pump operation.
16. Each pump shall be factory tested and name-plated before shipment.

ITT Industries

TÜV CERT DIN ISO 9001
ISO 9001 Certified

Bell & Gossett

USA
Bell & Gossett
8200 N. Austin Avenue
Morton Grove, IL 60053
Phone: (847) 966-3700
Facsimile: (847) 966-9052
http://www.bellgossett.com

INTL.
Bell & Gossett / Export Dept.
8200 N. Austin Avenue
Morton Grove, IL 60053
Phone: (847) 966-3700
Facsimile: (847) 966-8366
http://www.bellgossett.com

CANADA
Fluid Products Canada
55 Royal Road
Guelph, Ontario,
N1H 1T1, Canada
Phone: (519) 821-1900

© COPYRIGHT 1989, 1999 BY ITT INDUSTRIES, INC.

PRINTED IN U.S.A. 10-99