# System Diagram Workshop
# Hijend Hotel Chilled Water System Field Verification Exercise

Presented By:
David Sellers
Senior Engineer, Facility Dynamics Engineering

# Field Verifying a Chilled Water System Diagram

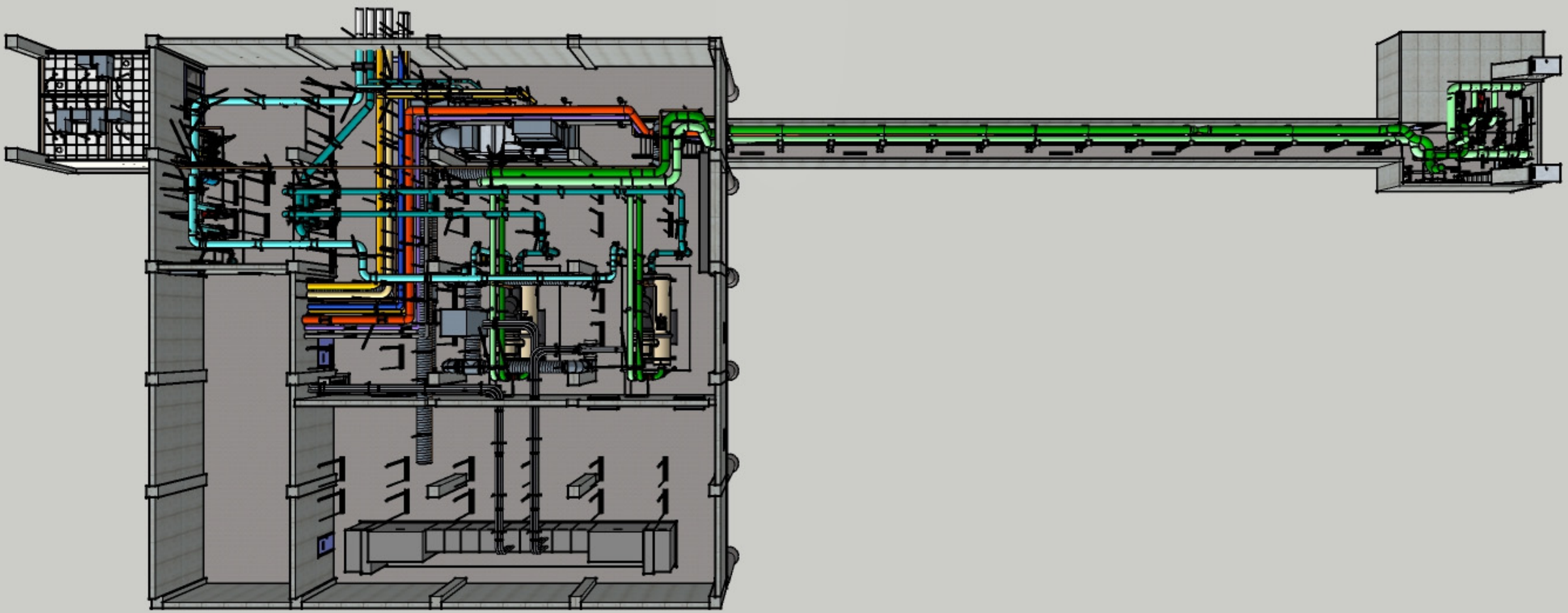

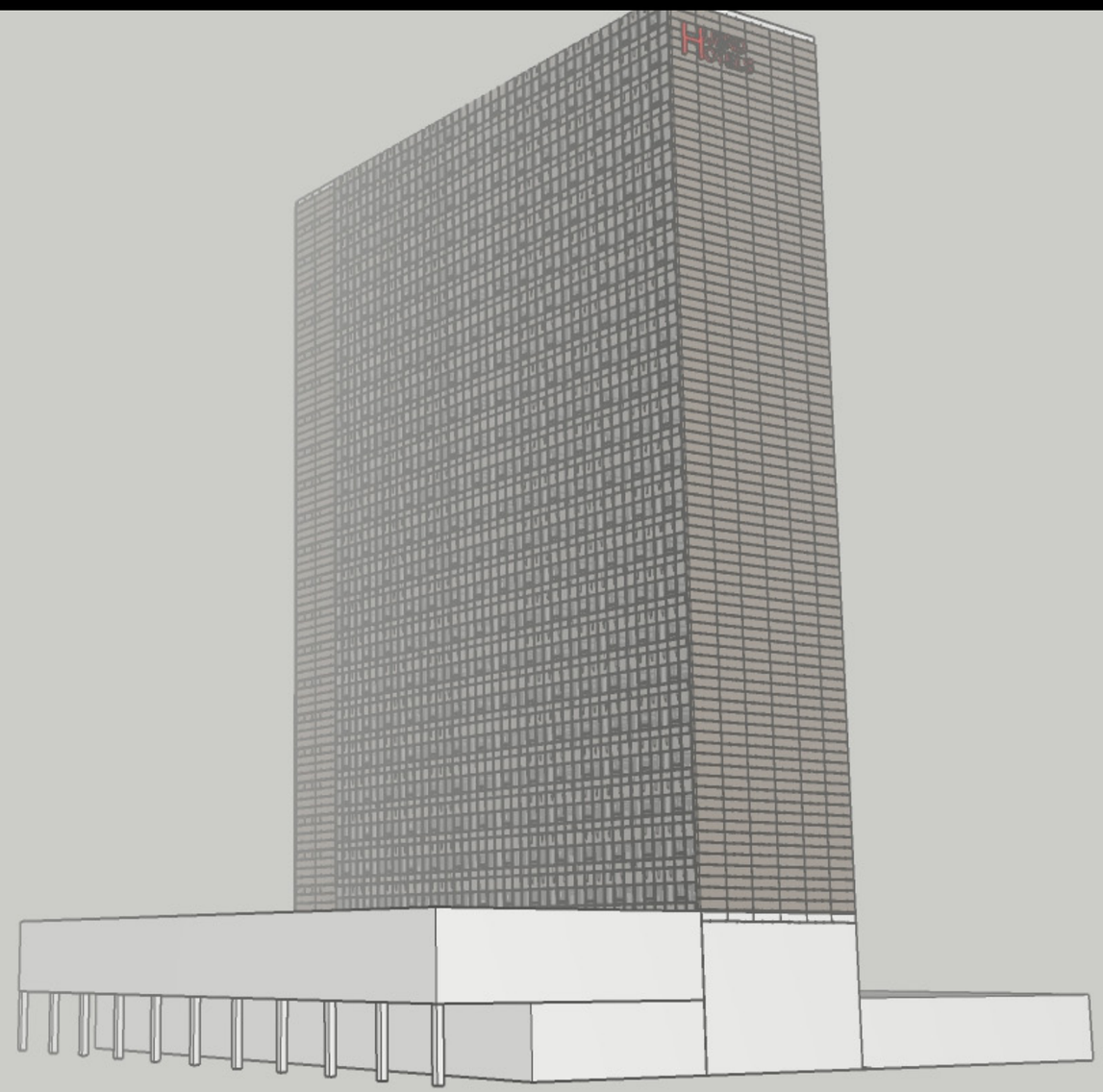
Hotel

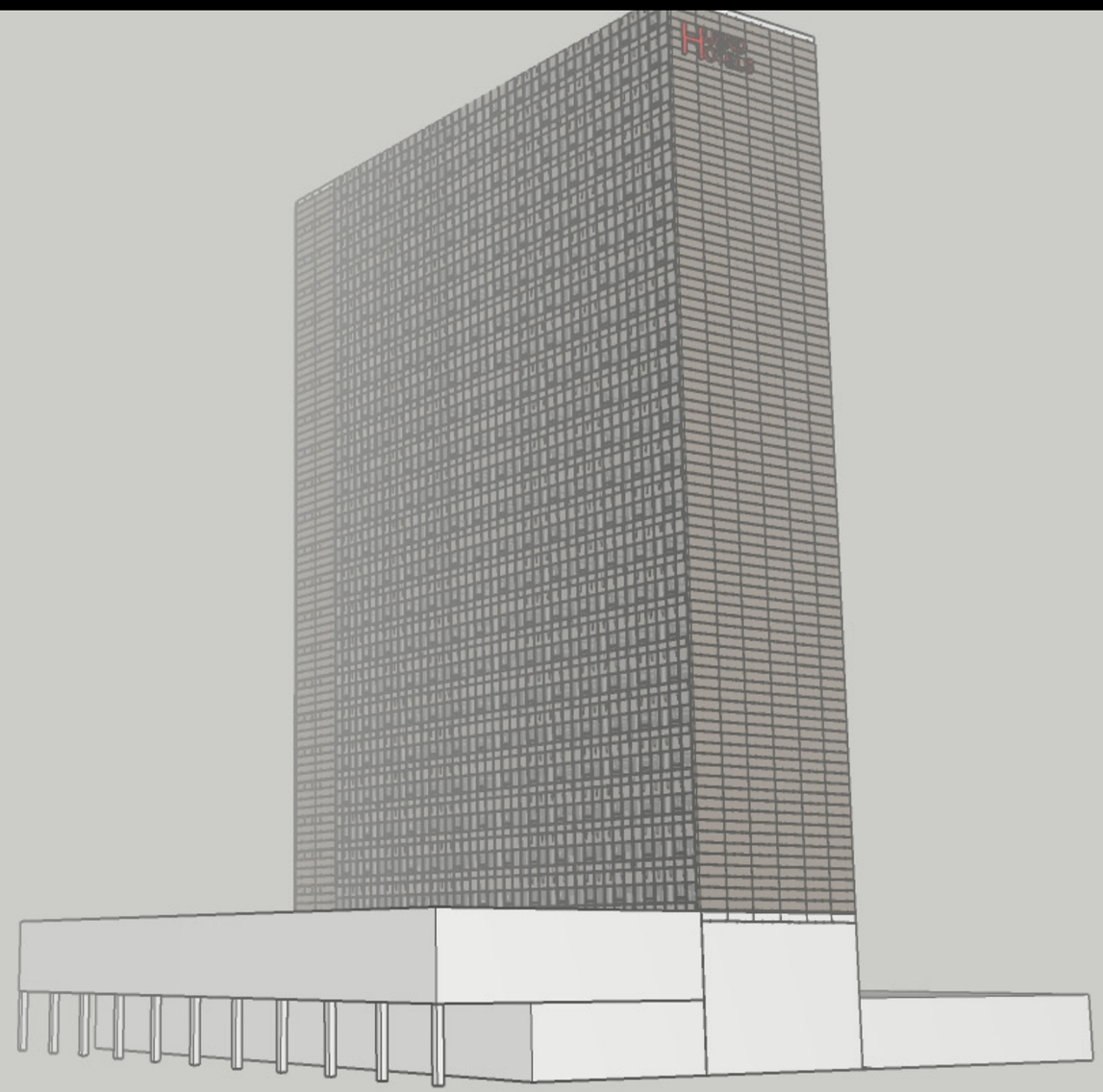
Hotel

# The Simplified Design Intent System Diagram

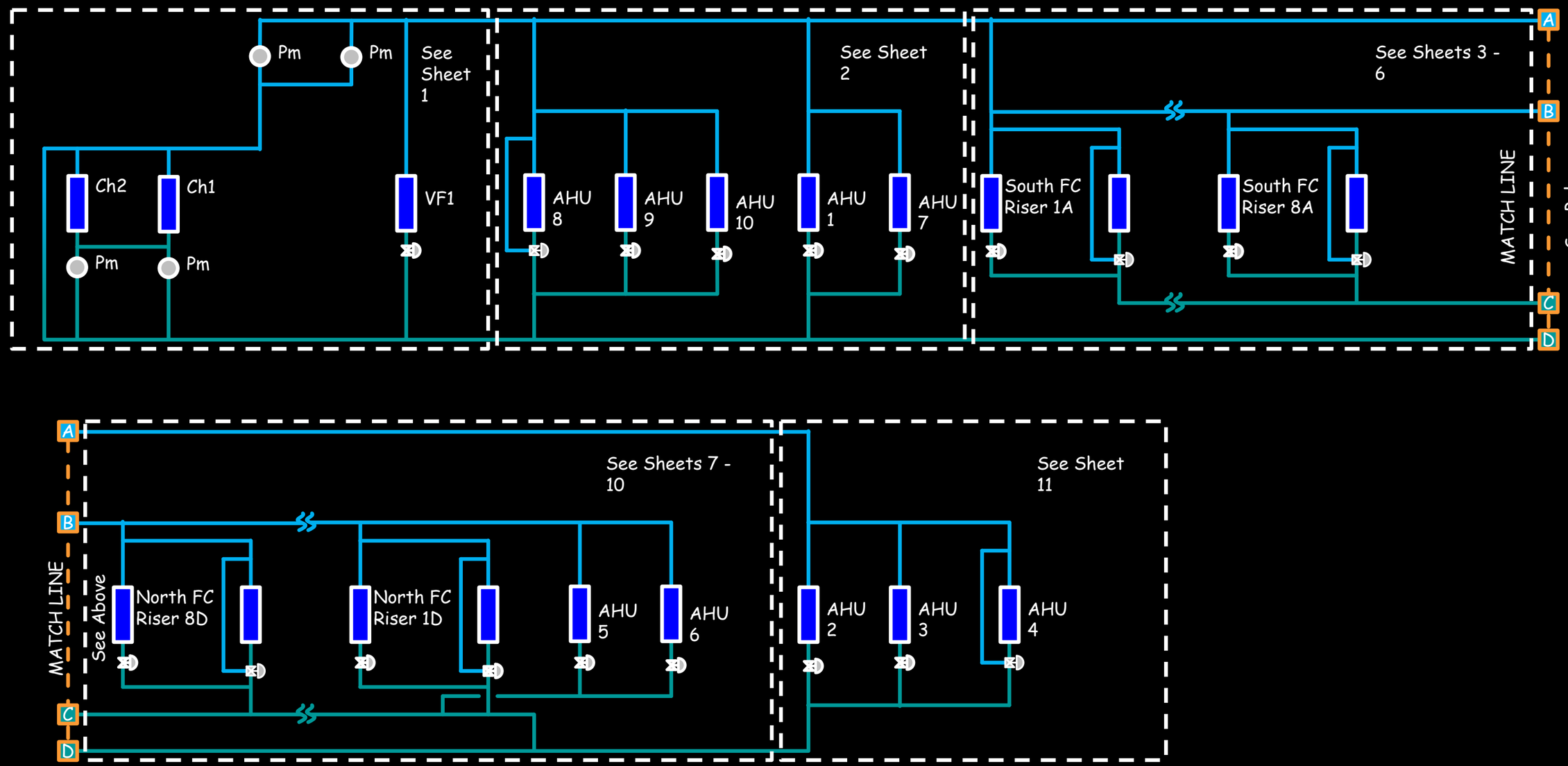

# The Detailed Diagram

- Developed from the mechanical drawings and submittals
- Needs to be field verified

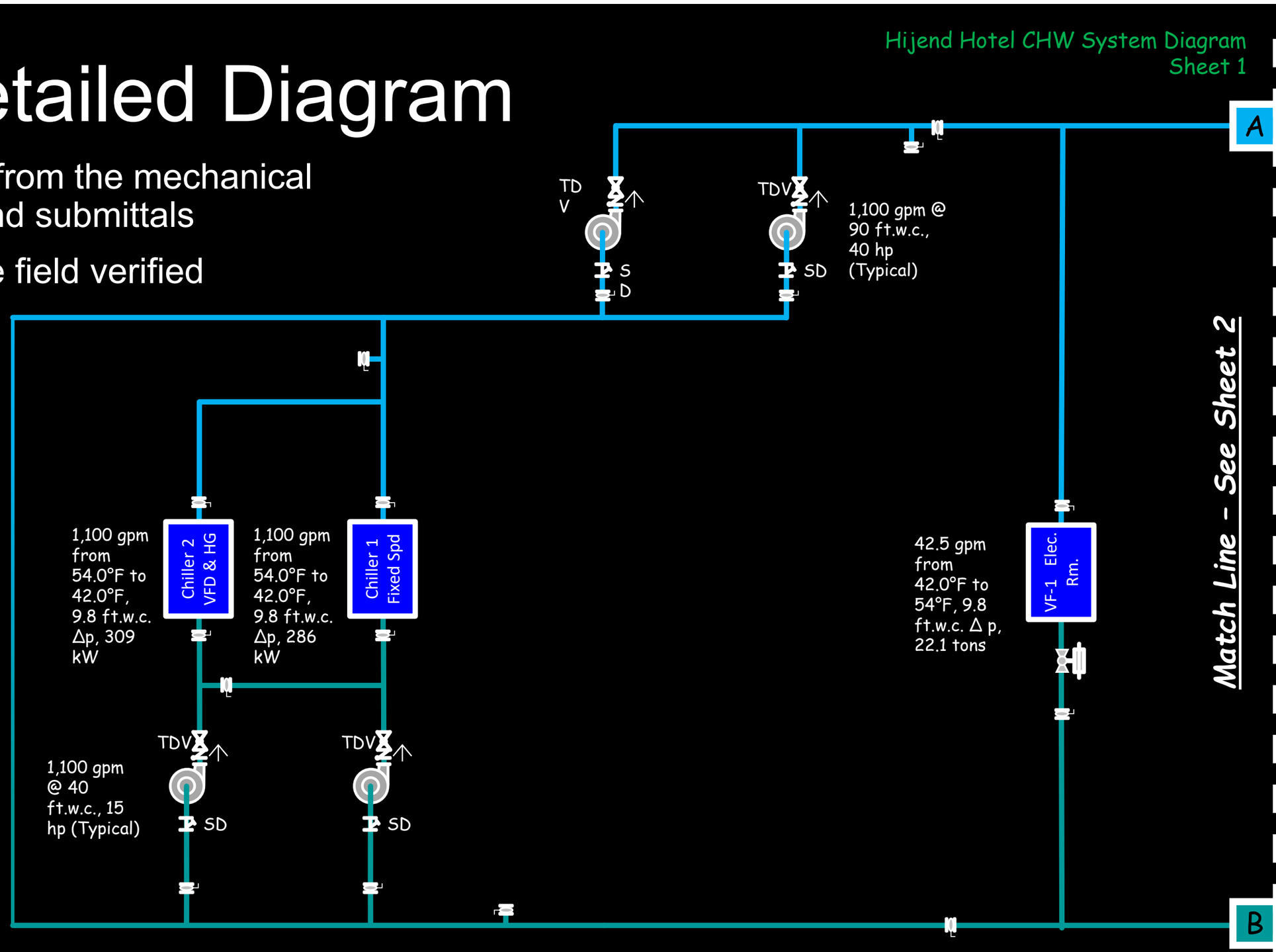

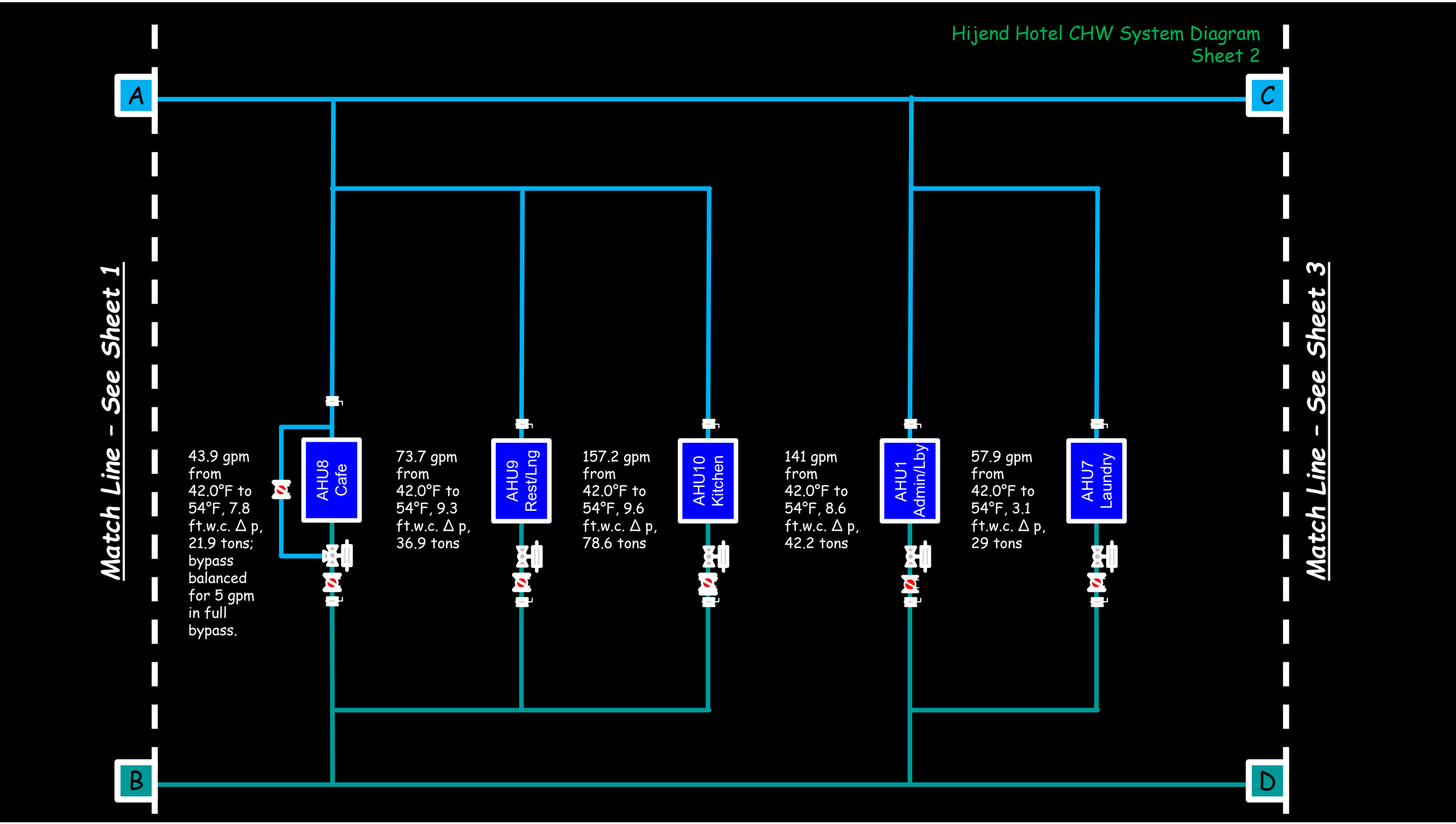
Hijend Hotel CHW System Diagram
Sheet 2
A
C
B
D
Match Line - See Sheet 1
Match Line - See Sheet 3
43.9 gpm from 42.0°F to 54°F, 7.8 ft.w.c. Δ p, 21.9 tons; bypass balanced for 5 gpm in full bypass.
AHU8 Cafe
73.7 gpm from 42.0°F to 54°F, 9.3 ft.w.c. Δ p, 36.9 tons
AHU9 Rest/Lng
157.2 gpm from 42.0°F to 54°F, 9.6 ft.w.c. Δ p, 78.6 tons
AHU10 Kitchen
141 gpm from 42.0°F to 54°F, 8.6 ft.w.c. Δ p, 42.2 tons
AHU1 Admin/Lby
57.9 gpm from 42.0°F to 54°F, 3.1 ft.w.c. Δ p, 29 tons
AHU7 Laundry

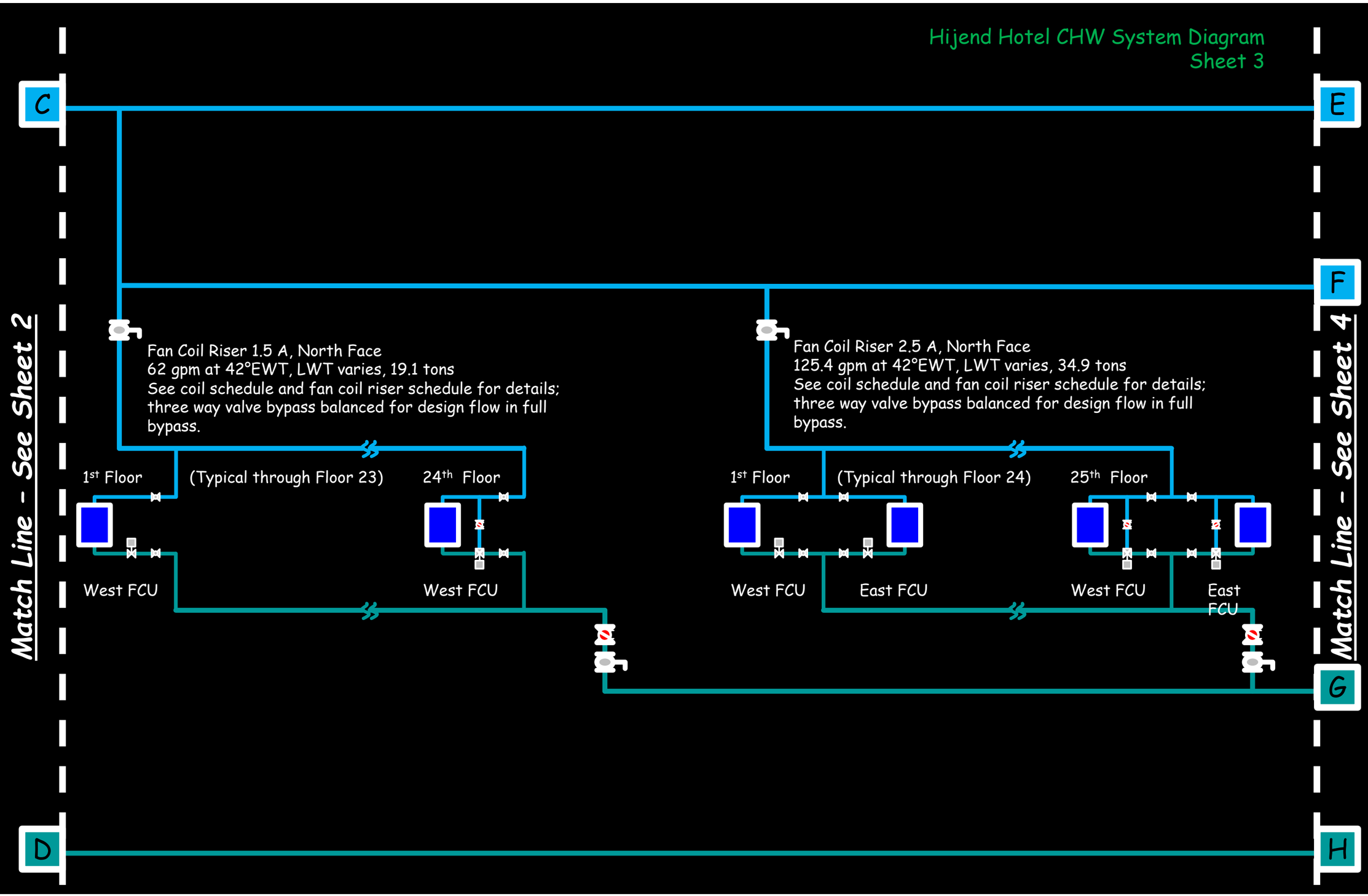
Hijend Hotel CHW System Diagram
Sheet 3
C
E
F
G
D
H
Match Line - See Sheet 2
Match Line - See Sheet 4
Fan Coil Riser 1.5 A, North Face
62 gpm at 42°EWT, LWT varies, 19.1 tons
See coil schedule and fan coil riser schedule for details;
three way valve bypass balanced for design flow in full
bypass.
Fan Coil Riser 2.5 A, North Face
125.4 gpm at 42°EWT, LWT varies, 34.9 tons
See coil schedule and fan coil riser schedule for details;
three way valve bypass balanced for design flow in full
bypass.
1st Floor
(Typical through Floor 23)
24th Floor
1st Floor
(Typical through Floor 24)
25th Floor
West FCU
West FCU
West FCU
East FCU
West FCU
East FCU

Hijend Hotel CHW System Diagram
Sheet 4

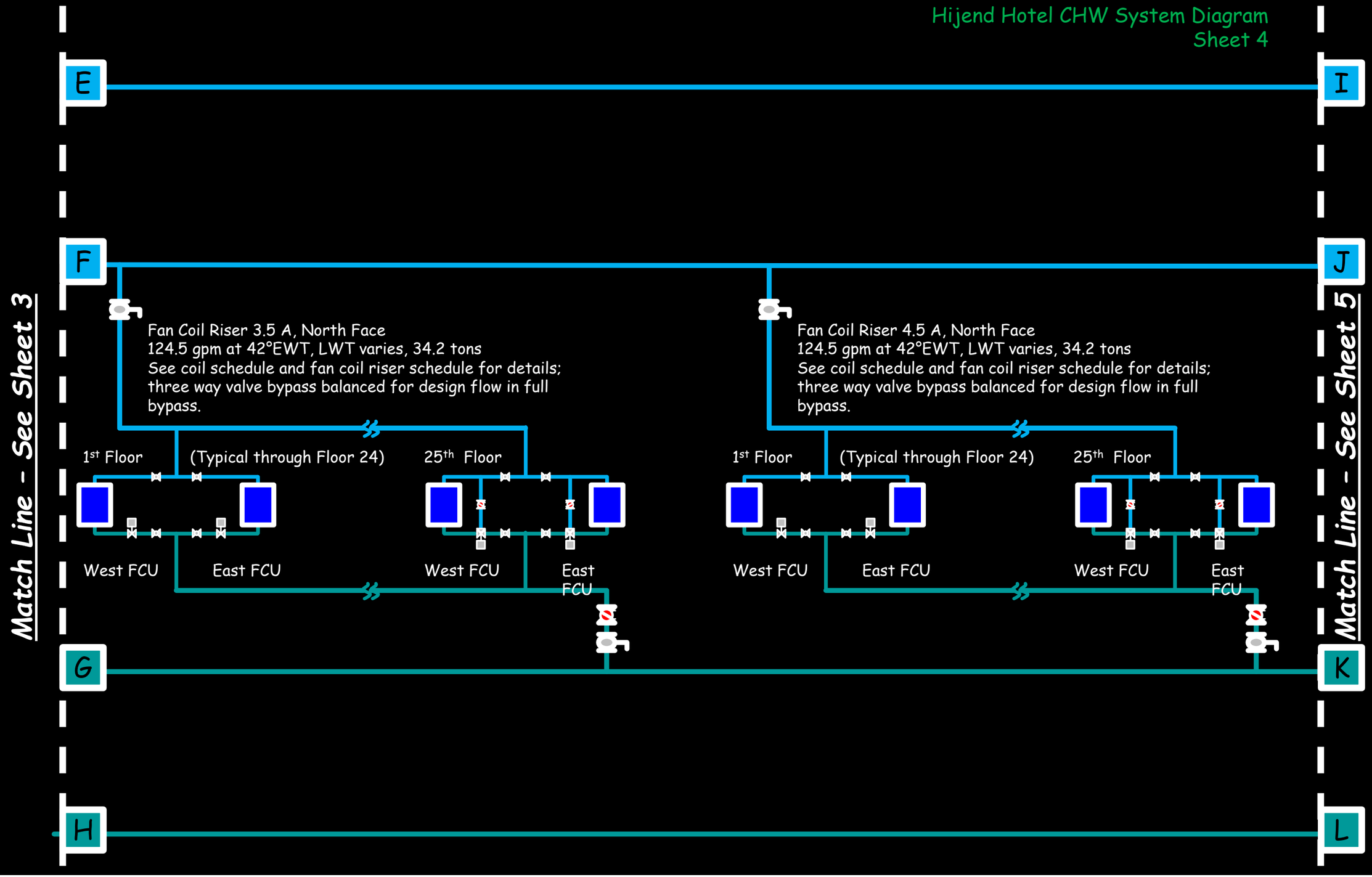

Hijend Hotel CHW System Diagram
Sheet 5

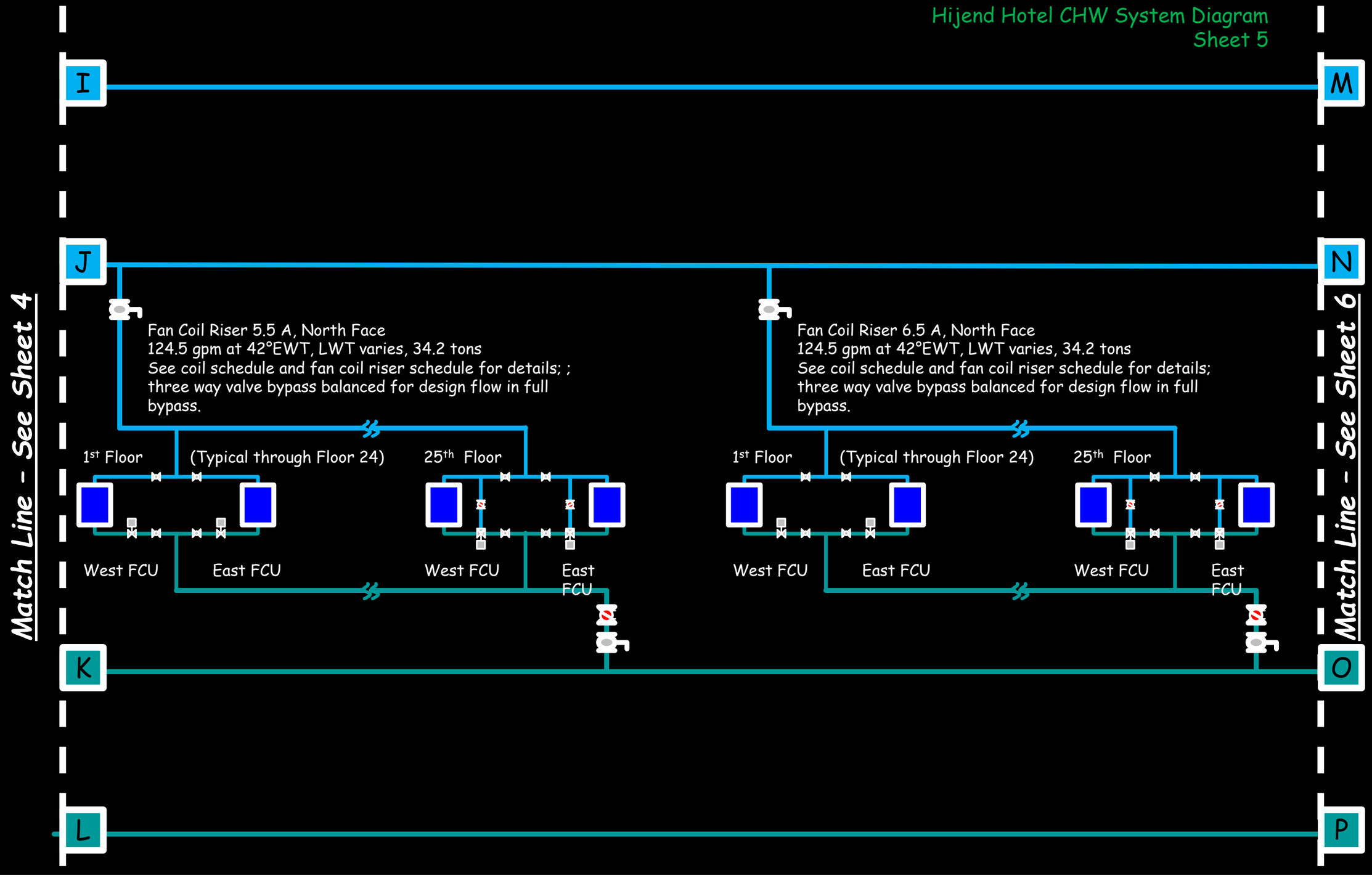

Hijend Hotel CHW System Diagram
Sheet 6

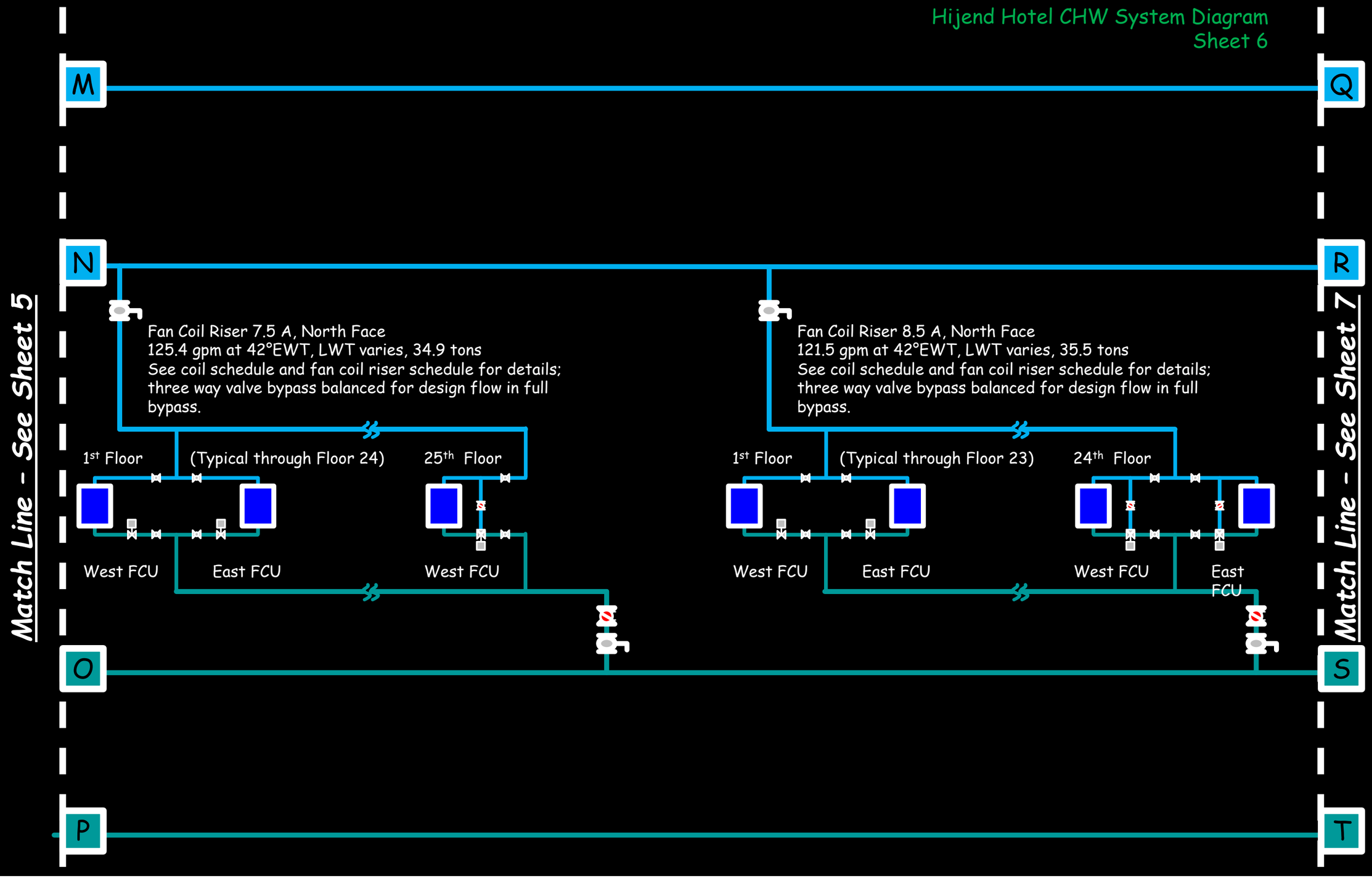

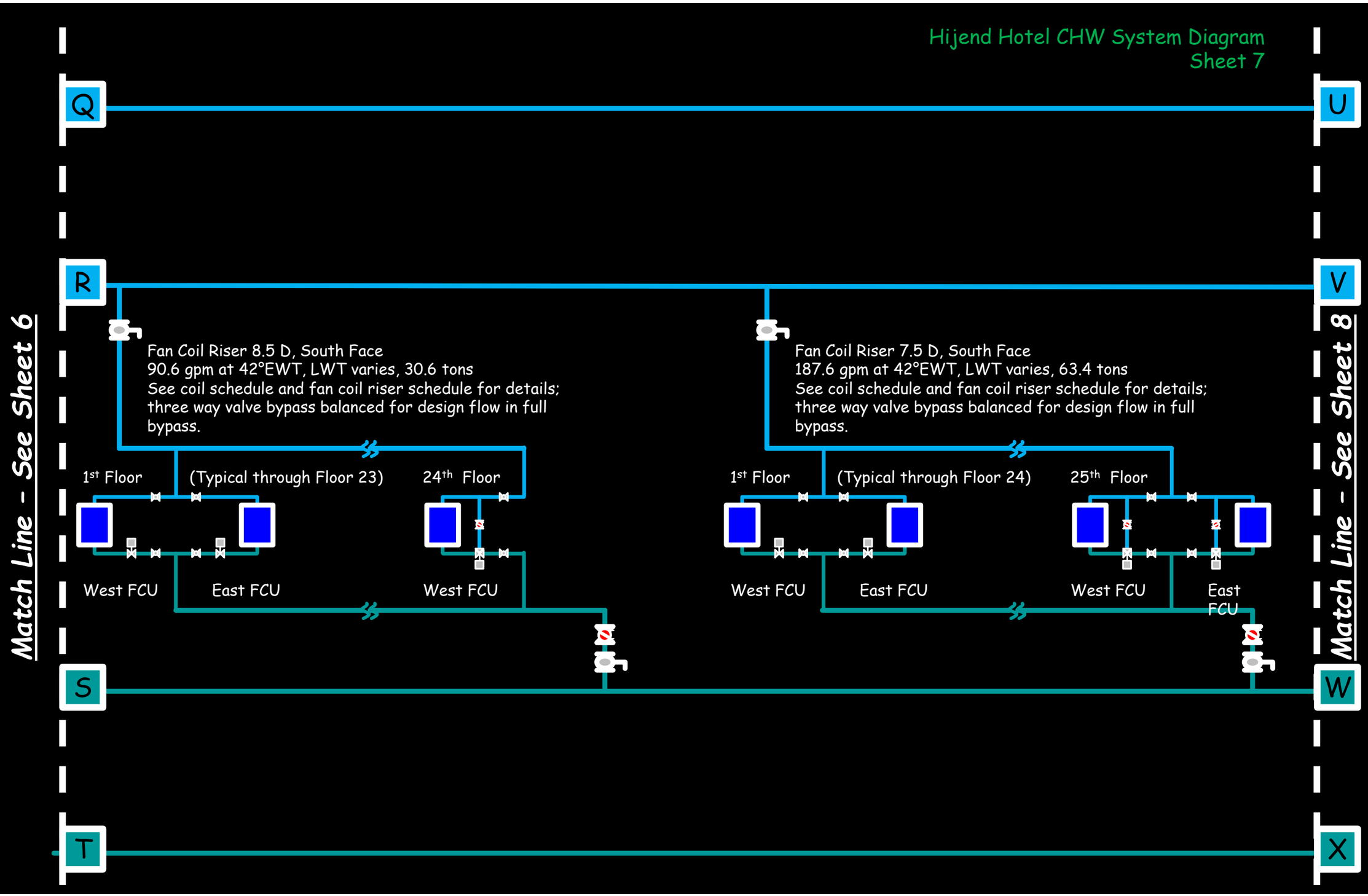
Hijend Hotel CHW System Diagram
Sheet 7
Q
U
R
V
S
W
T
X
Match Line - See Sheet 6
Match Line - See Sheet 8
Fan Coil Riser 8.5 D, South Face
90.6 gpm at 42°EWT, LWT varies, 30.6 tons
See coil schedule and fan coil riser schedule for details;
three way valve bypass balanced for design flow in full
bypass.
1st Floor
(Typical through Floor 23)
24th Floor
West FCU
East FCU
West FCU
Fan Coil Riser 7.5 D, South Face
187.6 gpm at 42°EWT, LWT varies, 63.4 tons
See coil schedule and fan coil riser schedule for details;
three way valve bypass balanced for design flow in full
bypass.
1st Floor
(Typical through Floor 24)
25th Floor
West FCU
East FCU
West FCU
East
FCU

Hijend Hotel CHW System Diagram
Sheet 8

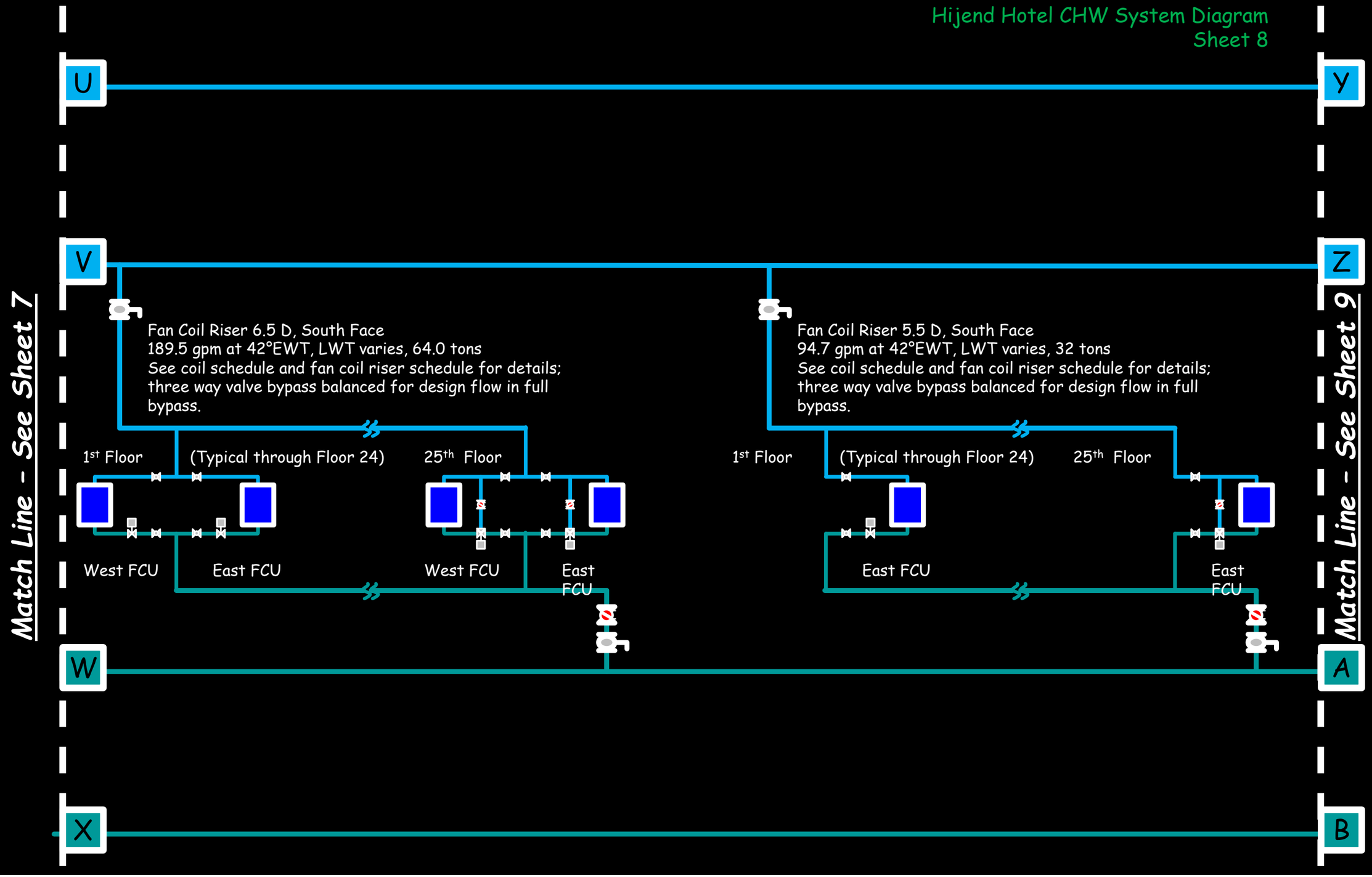

Hijend Hotel CHW System Diagram
Sheet 9

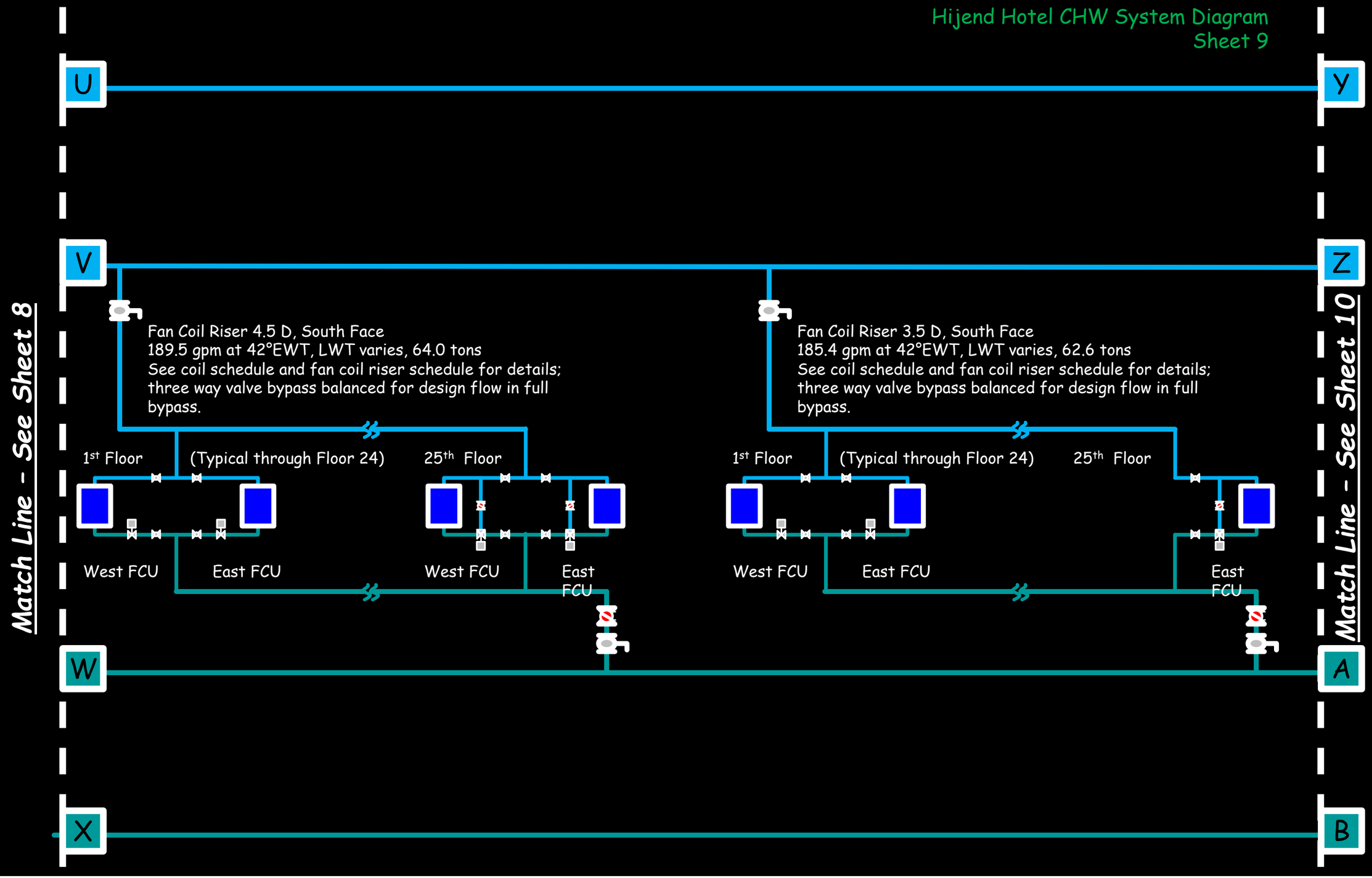

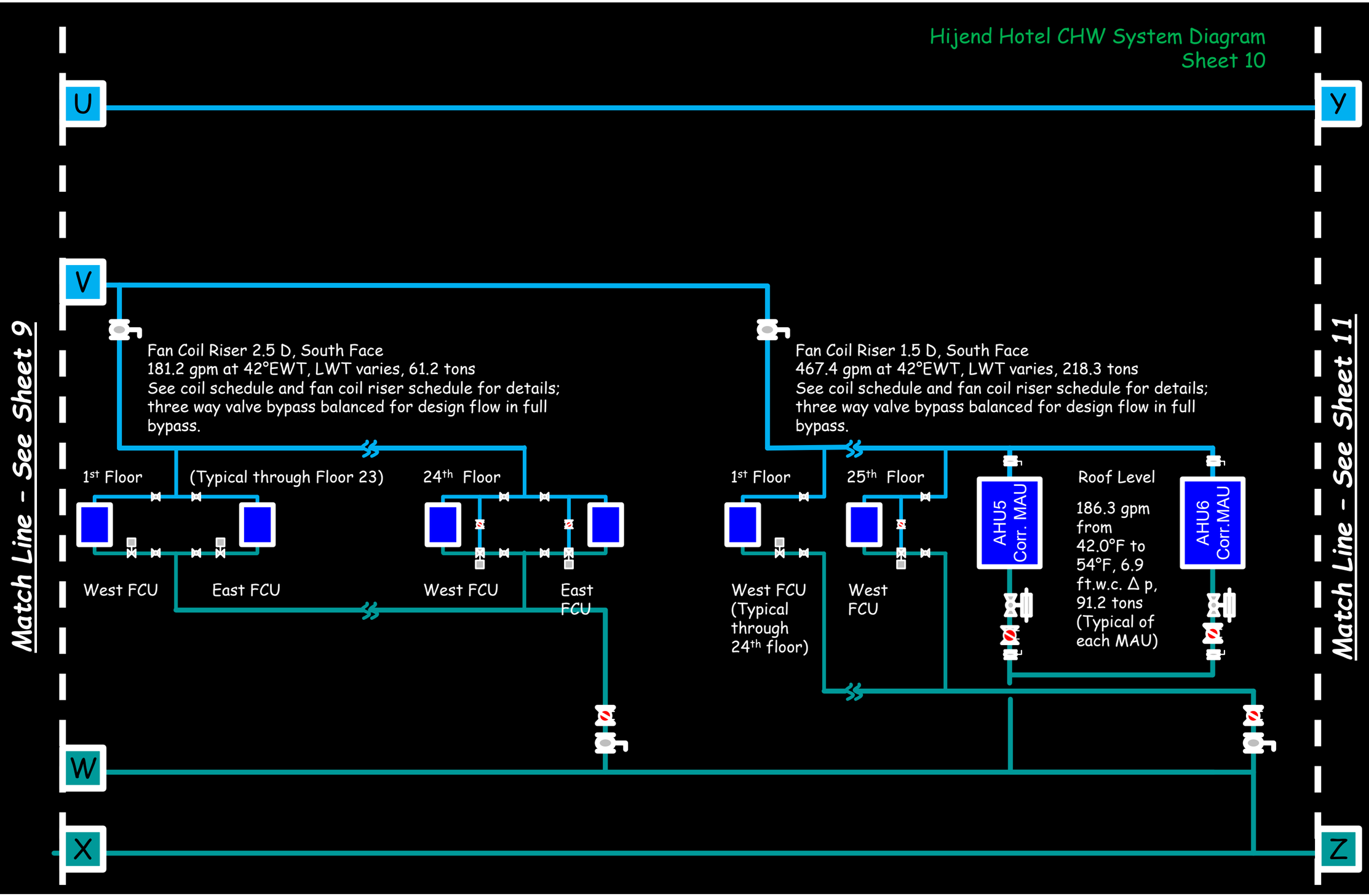
Hijend Hotel CHW System Diagram
Sheet 10
U
Y
V
W
X
Z
Match Line - See Sheet 9
Match Line - See Sheet 11
Fan Coil Riser 2.5 D, South Face
181.2 gpm at 42°EWT, LWT varies, 61.2 tons
See coil schedule and fan coil riser schedule for details; three way valve bypass balanced for design flow in full bypass.
Fan Coil Riser 1.5 D, South Face
467.4 gpm at 42°EWT, LWT varies, 218.3 tons
See coil schedule and fan coil riser schedule for details; three way valve bypass balanced for design flow in full bypass.
1st Floor
(Typical through Floor 23)
24th Floor
1st Floor
25th Floor
West FCU
East FCU
West FCU
East FCU
West FCU (Typical through 24th floor)
West FCU
AHU5 Corr. MAU
AHU6 Corr.MAU
Roof Level
186.3 gpm from 42.0°F to 54°F, 6.9 ft.w.c. Δ p, 91.2 tons (Typical of each MAU)

Hijend Hotel CHW System Diagram
Sheet 11

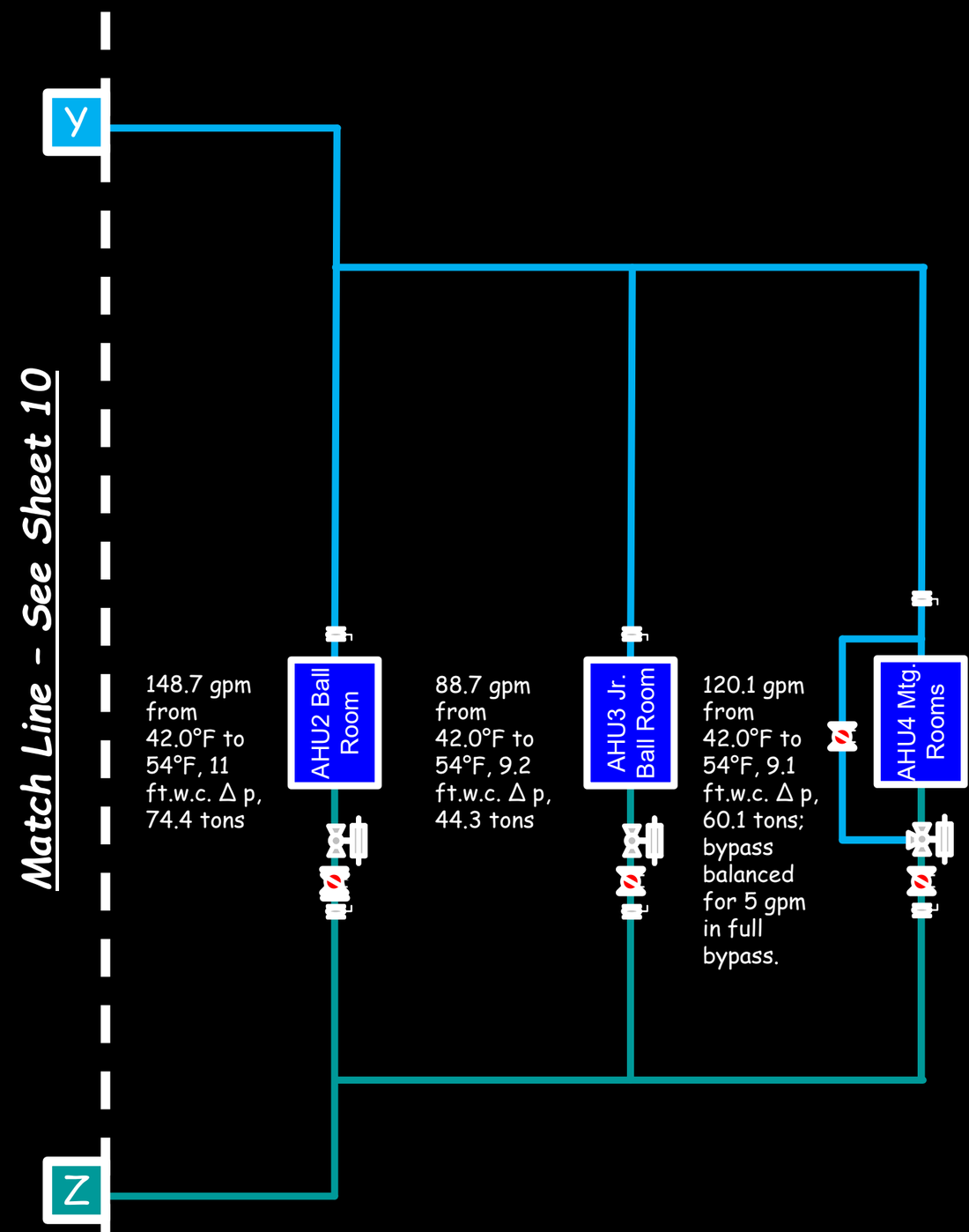

# Fan Coil Unit Riser Schedule

**Fan Coil Riser Schedule**

| Floor | Function | North Face Riser gpm | | | | | | | | | | | | | | | | South Face Riser gpm | | | | | | | | | | | | | | | | 1.5D Reversed Return | Riser Sizing Typical Riser based on 6.5D | | | |
|---|---|---|---|---|---|---|---|---|---|---|---|---|---|---|---|---|---|---|---|---|---|---|---|---|---|---|---|---|---|---|---|---|---|---|---|---|---|---|
| | | 1.5A | | 2.5A | | 3.5A | | 4.5A | | 5.5A | | 6.5A | | 7.5A | | 8.5A | | 8.5D | | 7.5D | | 6.5D | | 5.5D | | 4.5D | | 3.5D | | 2.5D | | 1.5D | | | Flow per Floor, gpm | | Line Size, in. | |
| | | W | E | W | E | W | E | W | E | W | E | W | E | W | E | W | E | W | E | W | E | W | E | W | E | W | E | W | E | W | E | W | E | | | | | |
| Roof | Mechanical Penthouses | | | | | | | | | | | | | | | | | | | | | | | | | | | | | | | 372.7 | | 2,051.0 | Supply | Return | Supply | Return |
| 25 | Guest Rooms | 0.0 | 0.0 | 6.3 | 0.0 | 2.7 | 2.7 | 2.7 | 2.7 | 2.7 | 2.7 | 2.7 | 2.7 | 6.3 | 0.0 | 0.0 | 0.0 | 0.0 | 0.0 | 6.3 | 0.0 | 4.1 | 4.1 | 0.0 | 4.1 | 4.1 | 4.1 | 0.0 | 4.1 | 0.0 | 0.0 | 4.1 | 0.0 | 2,051.0 | 8.2 | 189.5 | 1.5 | 4.0 |
| 24 | Guest Rooms | 2.8 | 0.0 | 2.7 | 2.7 | 2.7 | 2.7 | 2.7 | 2.7 | 2.7 | 2.7 | 2.7 | 2.7 | 2.7 | 2.7 | 2.7 | 2.8 | 4.1 | 0.0 | 4.1 | 4.1 | 4.1 | 4.1 | 0.0 | 4.1 | 4.1 | 4.1 | 4.1 | 4.1 | 4.1 | 4.1 | 4.1 | 0.0 | 2,051.0 | 16.5 | 181.2 | 1.5 | 4.0 |
| 23 | Guest Rooms | 2.8 | 0.0 | 2.7 | 2.7 | 2.7 | 2.7 | 2.7 | 2.7 | 2.7 | 2.7 | 2.7 | 2.7 | 2.7 | 2.7 | 2.7 | 2.8 | 4.1 | 0.0 | 4.1 | 4.1 | 4.1 | 4.1 | 0.0 | 4.1 | 4.1 | 4.1 | 4.1 | 4.1 | 4.1 | 4.1 | 4.1 | 0.0 | 2,051.0 | 24.7 | 173.0 | 2.0 | 4.0 |
| 22 | Guest Rooms | 2.8 | 0.0 | 2.7 | 2.7 | 2.7 | 2.7 | 2.7 | 2.7 | 2.7 | 2.7 | 2.7 | 2.7 | 2.7 | 2.7 | 2.7 | 2.8 | 4.1 | 0.0 | 4.1 | 4.1 | 4.1 | 4.1 | 0.0 | 4.1 | 4.1 | 4.1 | 4.1 | 4.1 | 4.1 | 4.1 | 4.1 | 0.0 | 2,051.0 | 33.0 | 164.8 | 2.0 | 4.0 |
| 21 | Guest Rooms | 2.8 | 0.0 | 2.7 | 2.7 | 2.7 | 2.7 | 2.7 | 2.7 | 2.7 | 2.7 | 2.7 | 2.7 | 2.7 | 2.7 | 2.7 | 2.8 | 4.1 | 0.0 | 4.1 | 4.1 | 4.1 | 4.1 | 0.0 | 4.1 | 4.1 | 4.1 | 4.1 | 4.1 | 4.1 | 4.1 | 4.1 | 0.0 | 2,051.0 | 41.2 | 156.5 | 2.0 | 4.0 |
| 20 | Guest Rooms | 2.8 | 0.0 | 2.7 | 2.7 | 2.7 | 2.7 | 2.7 | 2.7 | 2.7 | 2.7 | 2.7 | 2.7 | 2.7 | 2.7 | 2.7 | 2.8 | 4.1 | 0.0 | 4.1 | 4.1 | 4.1 | 4.1 | 0.0 | 4.1 | 4.1 | 4.1 | 4.1 | 4.1 | 4.1 | 4.1 | 4.1 | 0.0 | 2,051.0 | 49.4 | 148.3 | 2.5 | 4.0 |
| 19 | Guest Rooms | 2.8 | 0.0 | 2.7 | 2.7 | 2.7 | 2.7 | 2.7 | 2.7 | 2.7 | 2.7 | 2.7 | 2.7 | 2.7 | 2.7 | 2.7 | 2.8 | 4.1 | 0.0 | 4.1 | 4.1 | 4.1 | 4.1 | 0.0 | 4.1 | 4.1 | 4.1 | 4.1 | 4.1 | 4.1 | 4.1 | 4.1 | 0.0 | 2,051.0 | 57.7 | 140.1 | 2.5 | 4.0 |
| 18 | Guest Rooms | 2.8 | 0.0 | 2.7 | 2.7 | 2.7 | 2.7 | 2.7 | 2.7 | 2.7 | 2.7 | 2.7 | 2.7 | 2.7 | 2.7 | 2.7 | 2.8 | 4.1 | 0.0 | 4.1 | 4.1 | 4.1 | 4.1 | 0.0 | 4.1 | 4.1 | 4.1 | 4.1 | 4.1 | 4.1 | 4.1 | 4.1 | 0.0 | 2,051.0 | 65.9 | 131.8 | 2.5 | 4.0 |
| 17 | Guest Rooms | 2.8 | 0.0 | 2.7 | 2.7 | 2.7 | 2.7 | 2.7 | 2.7 | 2.7 | 2.7 | 2.7 | 2.7 | 2.7 | 2.7 | 2.7 | 2.8 | 4.1 | 0.0 | 4.1 | 4.1 | 4.1 | 4.1 | 0.0 | 4.1 | 4.1 | 4.1 | 4.1 | 4.1 | 4.1 | 4.1 | 4.1 | 0.0 | 2,051.0 | 74.1 | 123.6 | 3.0 | 3.0 |
| 16 | Guest Rooms | 2.8 | 0.0 | 2.7 | 2.7 | 2.7 | 2.7 | 2.7 | 2.7 | 2.7 | 2.7 | 2.7 | 2.7 | 2.7 | 2.7 | 2.7 | 2.8 | 4.1 | 0.0 | 4.1 | 4.1 | 4.1 | 4.1 | 0.0 | 4.1 | 4.1 | 4.1 | 4.1 | 4.1 | 4.1 | 4.1 | 4.1 | 0.0 | 2,051.0 | 82.4 | 115.3 | 3.0 | 3.0 |
| 15 | Guest Rooms | 2.8 | 0.0 | 2.7 | 2.7 | 2.7 | 2.7 | 2.7 | 2.7 | 2.7 | 2.7 | 2.7 | 2.7 | 2.7 | 2.7 | 2.7 | 2.8 | 4.1 | 0.0 | 4.1 | 4.1 | 4.1 | 4.1 | 0.0 | 4.1 | 4.1 | 4.1 | 4.1 | 4.1 | 4.1 | 4.1 | 4.1 | 0.0 | 2,051.0 | 90.6 | 107.1 | 3.0 | 3.0 |
| 14 | Guest Rooms | 2.8 | 0.0 | 2.7 | 2.7 | 2.7 | 2.7 | 2.7 | 2.7 | 2.7 | 2.7 | 2.7 | 2.7 | 2.7 | 2.7 | 2.7 | 2.8 | 4.1 | 0.0 | 4.1 | 4.1 | 4.1 | 4.1 | 0.0 | 4.1 | 4.1 | 4.1 | 4.1 | 4.1 | 4.1 | 4.1 | 4.1 | 0.0 | 2,051.0 | 98.9 | 98.9 | 3.0 | 3.0 |
| 13 | Guest Rooms | 2.8 | 0.0 | 2.7 | 2.7 | 2.7 | 2.7 | 2.7 | 2.7 | 2.7 | 2.7 | 2.7 | 2.7 | 2.7 | 2.7 | 2.7 | 2.8 | 4.1 | 0.0 | 4.1 | 4.1 | 4.1 | 4.1 | 0.0 | 4.1 | 4.1 | 4.1 | 4.1 | 4.1 | 4.1 | 4.1 | 4.1 | 0.0 | 2,051.0 | 107.1 | 90.6 | 3.0 | 3.0 |
| 12 | Guest Rooms | 2.8 | 0.0 | 2.7 | 2.7 | 2.7 | 2.7 | 2.7 | 2.7 | 2.7 | 2.7 | 2.7 | 2.7 | 2.7 | 2.7 | 2.7 | 2.8 | 4.1 | 0.0 | 4.1 | 4.1 | 4.1 | 4.1 | 0.0 | 4.1 | 4.1 | 4.1 | 4.1 | 4.1 | 4.1 | 4.1 | 4.1 | 0.0 | 2,051.0 | 115.3 | 82.4 | 3.0 | 3.0 |
| 11 | Guest Rooms | 2.8 | 0.0 | 2.7 | 2.7 | 2.7 | 2.7 | 2.7 | 2.7 | 2.7 | 2.7 | 2.7 | 2.7 | 2.7 | 2.7 | 2.7 | 2.8 | 4.1 | 0.0 | 4.1 | 4.1 | 4.1 | 4.1 | 0.0 | 4.1 | 4.1 | 4.1 | 4.1 | 4.1 | 4.1 | 4.1 | 4.1 | 0.0 | 2,051.0 | 123.6 | 74.1 | 3.0 | 3.0 |
| 10 | Guest Rooms | 2.8 | 0.0 | 2.7 | 2.7 | 2.7 | 2.7 | 2.7 | 2.7 | 2.7 | 2.7 | 2.7 | 2.7 | 2.7 | 2.7 | 2.7 | 2.8 | 4.1 | 0.0 | 4.1 | 4.1 | 4.1 | 4.1 | 0.0 | 4.1 | 4.1 | 4.1 | 4.1 | 4.1 | 4.1 | 4.1 | 4.1 | 0.0 | 2,051.0 | 131.8 | 65.9 | 4.0 | 2.5 |
| 9 | Guest Rooms | 2.8 | 0.0 | 2.7 | 2.7 | 2.7 | 2.7 | 2.7 | 2.7 | 2.7 | 2.7 | 2.7 | 2.7 | 2.7 | 2.7 | 2.7 | 2.8 | 4.1 | 0.0 | 4.1 | 4.1 | 4.1 | 4.1 | 0.0 | 4.1 | 4.1 | 4.1 | 4.1 | 4.1 | 4.1 | 4.1 | 4.1 | 0.0 | 2,051.0 | 140.1 | 57.7 | 4.0 | 2.5 |
| 8 | Guest Rooms | 2.8 | 0.0 | 2.7 | 2.7 | 2.7 | 2.7 | 2.7 | 2.7 | 2.7 | 2.7 | 2.7 | 2.7 | 2.7 | 2.7 | 2.7 | 2.8 | 4.1 | 0.0 | 4.1 | 4.1 | 4.1 | 4.1 | 0.0 | 4.1 | 4.1 | 4.1 | 4.1 | 4.1 | 4.1 | 4.1 | 4.1 | 0.0 | 2,051.0 | 148.3 | 49.4 | 4.0 | 2.5 |
| 7 | Guest Rooms | 2.8 | 0.0 | 2.7 | 2.7 | 2.7 | 2.7 | 2.7 | 2.7 | 2.7 | 2.7 | 2.7 | 2.7 | 2.7 | 2.7 | 2.7 | 2.8 | 4.1 | 0.0 | 4.1 | 4.1 | 4.1 | 4.1 | 0.0 | 4.1 | 4.1 | 4.1 | 4.1 | 4.1 | 4.1 | 4.1 | 4.1 | 0.0 | 2,051.0 | 156.5 | 41.2 | 4.0 | 2.0 |
| 6 | Guest Rooms | 2.8 | 0.0 | 2.7 | 2.7 | 2.7 | 2.7 | 2.7 | 2.7 | 2.7 | 2.7 | 2.7 | 2.7 | 2.7 | 2.7 | 2.7 | 2.8 | 4.1 | 0.0 | 4.1 | 4.1 | 4.1 | 4.1 | 0.0 | 4.1 | 4.1 | 4.1 | 4.1 | 4.1 | 4.1 | 4.1 | 4.1 | 0.0 | 2,051.0 | 164.8 | 33.0 | 4.0 | 2.0 |
| 5 | Guest Rooms | 2.8 | 0.0 | 2.7 | 2.7 | 2.7 | 2.7 | 2.7 | 2.7 | 2.7 | 2.7 | 2.7 | 2.7 | 2.7 | 2.7 | 2.7 | 2.8 | 4.1 | 0.0 | 4.1 | 4.1 | 4.1 | 4.1 | 0.0 | 4.1 | 4.1 | 4.1 | 4.1 | 4.1 | 4.1 | 4.1 | 4.1 | 0.0 | 2,051.0 | 173.0 | 24.7 | 4.0 | 2.0 |
| 4 | Guest Rooms | 2.8 | 0.0 | 2.7 | 2.7 | 2.7 | 2.7 | 2.7 | 2.7 | 2.7 | 2.7 | 2.7 | 2.7 | 2.7 | 2.7 | 2.7 | 2.8 | 4.1 | 0.0 | 4.1 | 4.1 | 4.1 | 4.1 | 0.0 | 4.1 | 4.1 | 4.1 | 4.1 | 4.1 | 4.1 | 4.1 | 4.1 | 0.0 | 2,051.0 | 181.2 | 16.5 | 4.0 | 1.5 |
| 3 | Guest Rooms | 2.8 | 0.0 | 2.7 | 2.7 | 2.7 | 2.7 | 2.7 | 2.7 | 2.7 | 2.7 | 2.7 | 2.7 | 2.7 | 2.7 | 2.7 | 2.8 | 4.1 | 0.0 | 4.1 | 4.1 | 4.1 | 4.1 | 0.0 | 4.1 | 4.1 | 4.1 | 4.1 | 4.1 | 4.1 | 4.1 | 4.1 | 0.0 | 2,051.0 | 189.5 | 8.2 | 4.0 | 1.5 |
| | Total gpm | 62.0 | | 125.4 | | 124.5 | | 124.5 | | 124.5 | | 124.5 | | 125.4 | | 121.5 | | 90.6 | | 187.6 | | 189.5 | | 94.7 | | 189.5 | | 185.4 | | 181.2 | | 467.4 | | 2,051.0 | | | | |
| | Minimimum Line size, inches | 3.0 | | 3.0 | | 3.0 | | 3.0 | | 3.0 | | 3.0 | | 3.0 | | 3.0 | | 3.0 | | 4.0 | | 4.0 | | 3.0 | | 4.0 | | 4.0 | | 4.0 | | 5.0 | | | | | | |
| | Header size. Inches | | | | | | | | | | | | | | | | | | | | | | | | | | | | | | | | | 10.0 | | | | |
| | Total Tons | 19.1 | | 34.9 | | 34.2 | | 34.2 | | 34.2 | | 34.2 | | 34.9 | | 35.5 | | 30.6 | | 63.4 | | 64.0 | | 32.0 | | 64.0 | | 62.6 | | 61.2 | | 218.3 | | | | | | |

| Coil No. | Service | gpm | Tons |
|---|---|---|---|
| CC-GR01 | Typcial North Exposure Guest Room (294 thus) | 2.7 | 0.7 |
| CC-GR02 | Typcial East Exposure Guest Room (22 thus) | 2.8 | 0.9 |
| CC-GR03 | Typcial South Exposure Guest Room (292 thus) | 4.1 | 1.4 |
| CC-GR04 | Typcial West Exposure Guest Room (22 thus) | 2.8 | 0.9 |
| CC-CR05 | Typcial Luxury Guest Room (4 thus) | 6.3 | 2.2 |
| CC-5 | Corridor Make-up Air | 186.3 | 93.2 |
| CC-6 | Corridor Make-up Air | 186.3 | 93.2 |
| | Three-way valve gpm (red boarder) | 64.2 | |

# Cooling Coil Schedule

| Cooling Coil Schedule | | | | | | | | | | | | | | | | | |
|---|---|---|---|---|---|---|---|---|---|---|---|---|---|---|---|---|---|
| Coil Number | Unit or System Served | Flow, cfm | Maximum Fins per Inch | Rows | Minimum Face Area, sq.ft. | Airside Performance | | | | | | Waterside Performance | | | | | Comments |
| | | | | | | Entering Air | | Leaving Air | | Face Velocity, fpm | Pressure Drop, in.w.c. | Entering Water Temperature, °F | Leaving Water Temperature, °F | Flow Rate, gpm | Pressure Drop, ft.w.c. | Tons | |
| | | | | | | Dry bulb, °F | Wet bulb, °F | Dry bulb, °F | Wet bulb, °F | | | | | | | | |
| CC-1 | AHU1 - Hotel Lobby and Administration | 26,000 | 8 | 6 | 52.0 | 81.0 | 63.8 | 51.0 | 50.5 | 433 | 0.63 | 42.0 | 56.0 | 141.0 | 8.6 | 82.2 | |
| CC-2 | Main Ball Room | 20,000 | 9 | 6 | 40.0 | 86.6 | 66.1 | 51.4 | 50.9 | 500 | 0.82 | 42.0 | 54.0 | 148.7 | 11.0 | 74.4 | |
| CC-3 | Junior Ball Room | 15,000 | 8 | 6 | 30.0 | 80.2 | 63.5 | 51.7 | 51.1 | 500 | 0.74 | 42.0 | 54.0 | 88.7 | 9.2 | 44.3 | |
| CC-4 | Meeting Rooms | 15,000 | 9 | 6 | 30.0 | 90.3 | 67.6 | 52.2 | 51.6 | 500 | 0.83 | 42.0 | 54.0 | 120.1 | 9.1 | 60.1 | 3-way valve |
| CC-5 | Corridor Make-up Air | 23,775 | 8 | 6 | 47.6 | 90.3 | 67.6 | 52.8 | 52.0 | 500 | 0.76 | 42.0 | 54.0 | 186.3 | 6.9 | 93.2 | |
| CC-6 | Corridor Make-up Air | 23,775 | 8 | 6 | 47.6 | 90.3 | 67.6 | 52.8 | 52.0 | 472 | 0.70 | 42.0 | 54.0 | 186.3 | 6.9 | 93.2 | |
| CC-7 | Laundry | 10,000 | 8 | 6 | 20.0 | 81.3 | 65.0 | 53.9 | 53.3 | 500 | 0.75 | 42.0 | 54.0 | 57.9 | 3.1 | 29.0 | |
| CC-8 | Breakfast/Lunch Café | 6,500 | 8 | 6 | 13.0 | 82.7 | 64.5 | 50.9 | 50.4 | 406 | 0.56 | 42.0 | 54.0 | 43.9 | 7.8 | 21.9 | 3-way valve |
| CC-9 | Restaurant and Lounge | 11,500 | 8 | 6 | 23.0 | 82.7 | 64.5 | 51.8 | 51.2 | 479 | 0.70 | 42.0 | 54.0 | 73.7 | 9.3 | 36.9 | |
| CC-10 | Main Kitchen | 19,000 | 8 | 6 | 38.0 | 88.5 | 67.6 | 51.5 | 51.0 | 396 | 0.56 | 42.0 | 54.0 | 157.2 | 9.2 | 78.6 | |
| VF-1 | Electrical Room | 8,200 | 8 | 3 | 16.4 | 83.7 | 67.6 | 60.7 | 57.9 | 410 | 0.35 | 42.0 | 54.0 | 42.5 | 9.8 | 21.2 | |
| CC-GR01 | Typcial North Exposure Guest Room (294 thus) | 300 | 14 | 3 | 1.4 | 72.0 | 60.0 | 49.4 | 49.0 | 214 | 0.15 | 42.0 | 48.6 | 2.7 | 3.5 | 0.7 | 3-way valve top of riser |
| CC-GR02 | Typcial East Exposure Guest Room (22 thus) | 400 | 14 | 3 | 1.4 | 72.0 | 60.0 | 51.2 | 50.5 | 285 | 0.22 | 42.0 | 49.4 | 2.8 | 3.7 | 0.9 | 3-way valve top of riser |
| CC-GR03 | Typcial South Exposure Guest Room (292 thus) | 600 | 14 | 3 | 2.2 | 72.0 | 60.0 | 50.4 | 49.8 | 275 | 0.21 | 42.0 | 50.1 | 4.1 | 9.7 | 1.4 | 3-way valve top of riser |
| CC-GR04 | Typcial West Exposure Guest Room (22 thus) | 400 | 14 | 3 | 1.4 | 72.0 | 60.0 | 51.2 | 50.5 | 285 | 0.22 | 42.0 | 49.4 | 2.8 | 3.7 | 0.9 | 3-way valve top of riser |
| CC-CR05 | Typcial Luxury Guest Room (4 thus) | 1,000 | 14 | 3 | 3.2 | 72.0 | 60.0 | 51.2 | 50.4 | 313 | 0.26 | 42.0 | 50.3 | 6.3 | 8.9 | 2.2 | |

# System Volume Projection

| Item | Nominal Diameter, ft. in. | Nominal Diameter, ft. ft. | Nominal Area, sq.ft. | Length of run, ft. | Volume, cu.ft. | Pounds of Water | Gallons of Water |
|---|---|---|---|---|---|---|---|
| Chiller 2 Pumping Loop | | | Sub Totals | 173 | 81 | 7,048 | 845 |
| Evaporator pump return header - bypass to Chiller 2 Pump | 12.0 | 1.00 | 0.79 | 4 | 3 | 196 | 23 |
| Chiller 2 return piping - | 8.0 | 0.67 | 0.35 | 103 | 36 | 2,244 | 269 |
| Chiller 2 tube bundle - | | | | | | 2,000 | 240 |
| Chiller 2 supply piping - | 8.0 | 0.67 | 0.35 | 23 | 8 | 501 | 60 |
| Chiller supply piping to bypass - | 12.0 | 1.00 | 0.79 | 36 | 28 | 1,764 | 211 |
| Plant bypass - | 12.0 | 1.00 | 0.79 | 7 | 5 | 343 | 41 |
| Distibution Piping - Inside Plant | | | Sub Totals | 141 | 99 | 6,202 | 743 |
| Plant supply to distribution pump header | 12.0 | 1.00 | 0.79 | 22 | 17 | 1,078 | 129 |
| Central plant return to evaporator pump tee - | 12.0 | 1.00 | 0.79 | 39 | 31 | 1,911 | 229 |
| Distribution pump connection - | 8.0 | 0.67 | 0.35 | 26 | 9 | 566 | 68 |
| Supply header to central plant wall - | 12.0 | 1.00 | 0.79 | 54 | 42 | 2,646 | 317 |
| Distibution Piping - Outside Plant | | | Sub Totals | 11,016 | 1,538 | 95,996 | 11,507 |
| Supply main from plant to point where fan coil headers connect - | 12.0 | 1.00 | 0.79 | 218 | 171 | 10,684 | 1,281 |
| Return main from plant to point where fan coil headers connect - | 12.0 | 1.00 | 0.79 | 218 | 171 | 10,684 | 1,281 |
| Fan coil supply header - | 10.0 | 0.83 | 0.55 | 474 | 259 | 16,132 | 1,934 |
| Fan coil supply risers - 1st segment - | 4.0 | 0.33 | 0.09 | 1,536 | 134 | 8,364 | 1,003 |
| Fan coil supply risers - 2nd segment - | 3.0 | 0.25 | 0.05 | 1,344 | 66 | 4,117 | 493 |
| Fan coil supply risers - 3rd segment - | 2.5 | 0.21 | 0.03 | 576 | 20 | 1,225 | 147 |
| Fan coil supply risers - 4th segment - | 2.0 | 0.17 | 0.02 | 576 | 13 | 784 | 94 |
| Fan coil supply risers - 5th segment - | 1.5 | 0.13 | 0.01 | 416 | 5 | 319 | 38 |
| Fan coil return risers - 1st segment - | 4.0 | 0.33 | 0.09 | 1,536 | 134 | 8,364 | 1,003 |
| Fan coil return risers - 2nd segment - | 3.0 | 0.25 | 0.05 | 1,344 | 66 | 4,117 | 493 |
| Fan coil return risers - 3rd segment - | 2.5 | 0.21 | 0.03 | 576 | 20 | 1,225 | 147 |
| Fan coil return risers - 4th segment - | 2.0 | 0.17 | 0.02 | 576 | 13 | 784 | 94 |
| Fan coil return risers - 5th segment - | 1.5 | 0.13 | 0.01 | 416 | 5 | 319 | 38 |
| Active fan coil unit coils - | | | | | 21 | 1,310 | 157 |
| Fan coil supply header - | 10.0 | 0.83 | 0.55 | 698 | 381 | 23,756 | 2,848 |
| Mains to meeting room AHU - | 5.0 | 0.42 | 0.14 | 44 | 6 | 374 | 45 |
| Mains from meeting room AHU - | 5.0 | 0.42 | 0.14 | 44 | 6 | 374 | 45 |
| Meeting room AHU supply - | 3.0 | 0.25 | 0.05 | 23 | 1 | 70 | 8 |
| Meeting room AHU return - | 3.0 | 0.25 | 0.05 | 23 | 1 | 70 | 8 |
| Mains to cafe AHU - | 5.0 | 0.42 | 0.14 | 166 | 23 | 1,412 | 169 |
| Mains from cafe AHU - | 5.0 | 0.42 | 0.14 | 166 | 23 | 1,412 | 169 |
| Cafe AHU supply - | 2.5 | 0.21 | 0.03 | 23 | 1 | 49 | 6 |
| Cafe AHU return - | 2.5 | 0.21 | 0.03 | 23 | 1 | 49 | 6 |
| | | | Totals - | 11,330 | 1,719 | 109,246 | 13,096 |

# Design Intent System Diagram

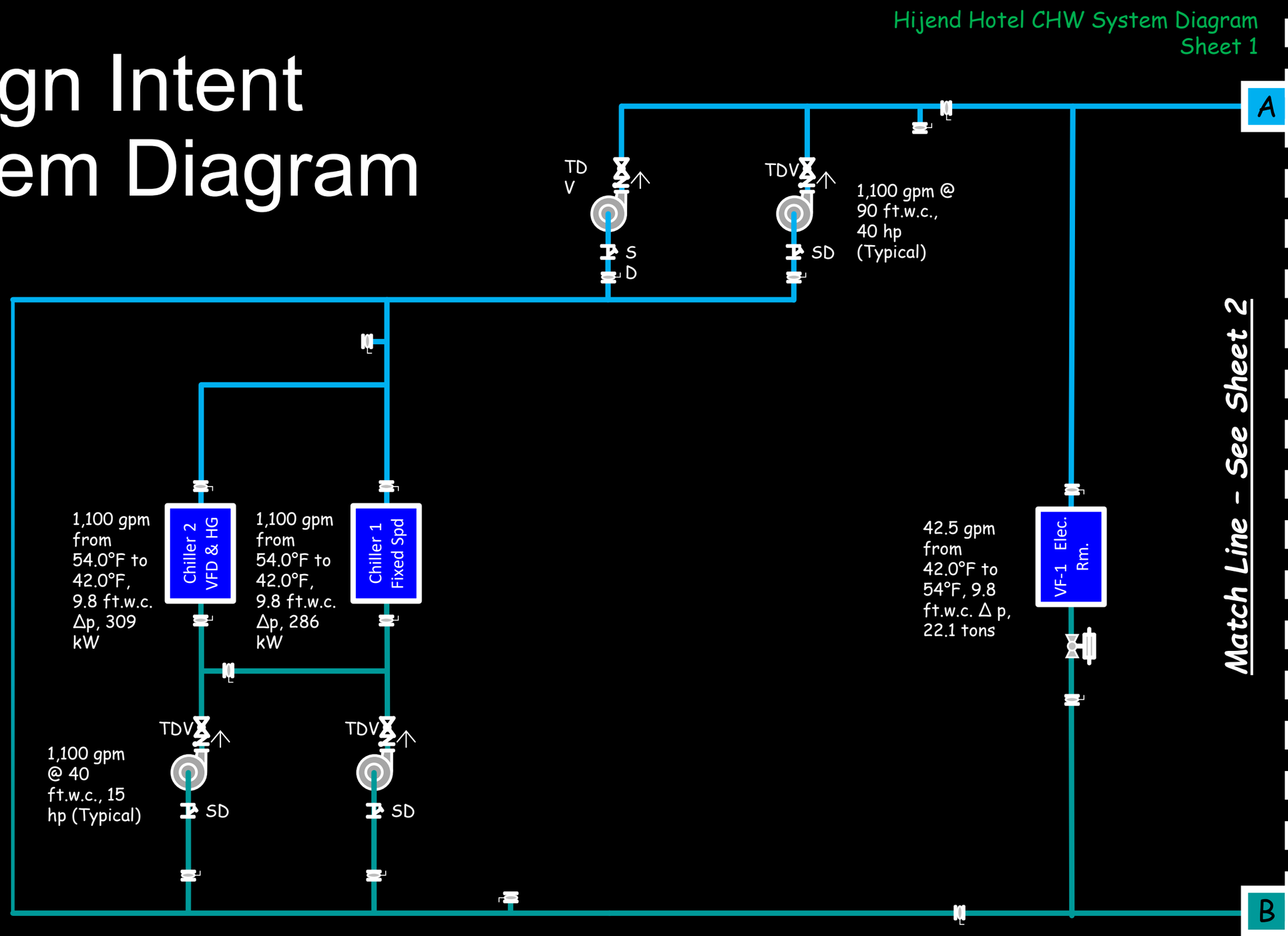

# Field Verification Exercise

Given:

- The design intent system diagram
- The 3DVista model of the plant at this link:

  https://tinyurl.com/PECSysDgmAddEvapPump

Do the Following

1. Field verify the central plant portion of the system diagram
2. Does the design intent diagram match what was installed?
3. If there are differences, do they matter and what are the implications?