# Control Systems: Design, Performance and Commissioning Issues

## Commissioning

**Instructor:**

- David Sellers
- Senior Engineer
- Facility Dynamics Engineering

- October 23, 2017

# Commissioning the Control System …

… *the first step in commissioning the controlled system*

# Bottom Line

- Repeatable, Reliable, Robust Sequences need the Support of Repeatable, Reliable, Robust Hardware
  - Quick actuator speeds
  - Quick response times
  - Appropriate accuracy
  - Hardware accessible and labeled
  - Actuators fully functional over the full range of command
  - Failure modes are appropriate for the application
  - Alarms are meaningful and verified

## Estimated System Reliability for New Smoke Management System That Has Not Been Commissioned

(ASHRAE Smoke Mangament Handbook Basis, Table 1.1)

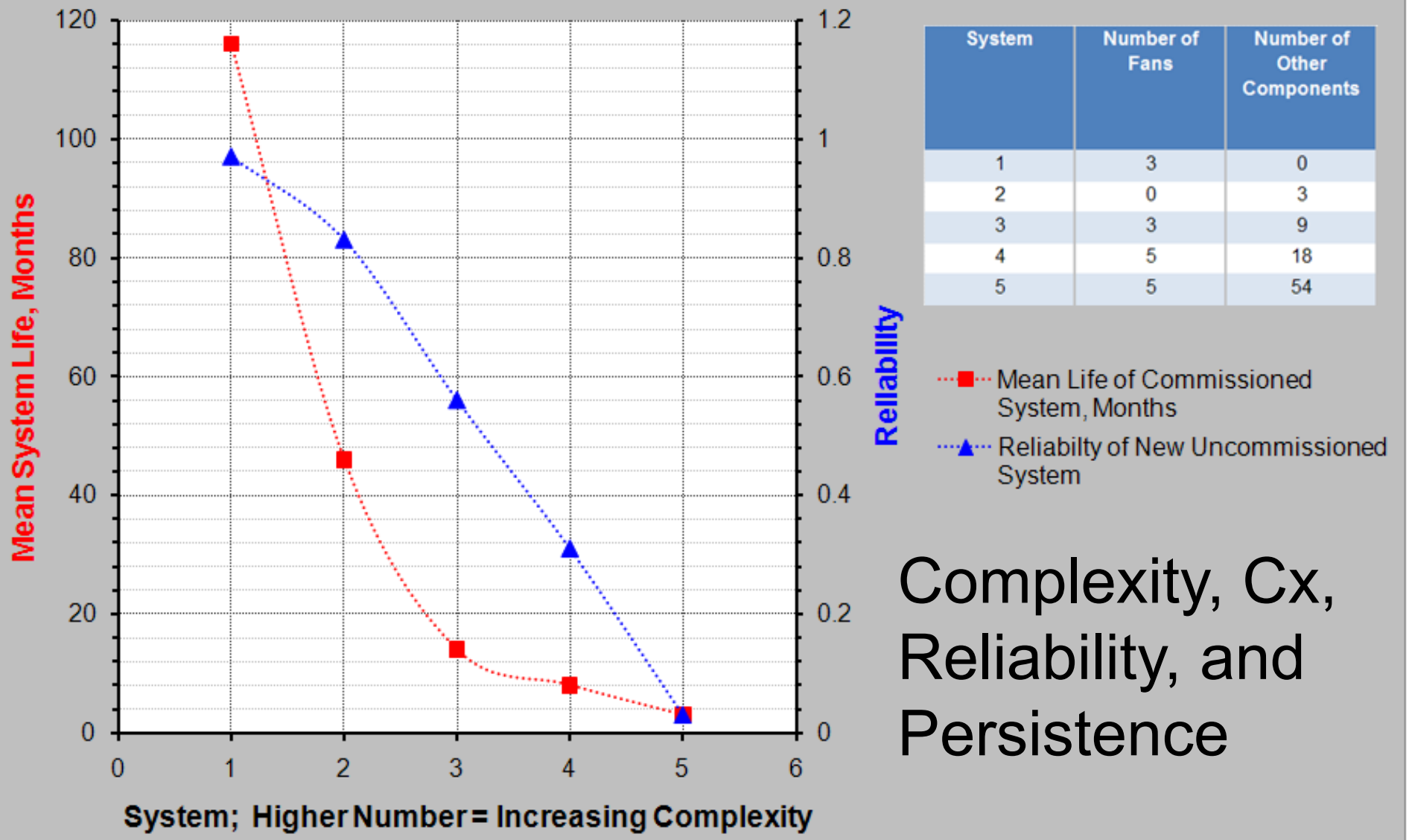


| System | Number of Fans | Number of Other Components |
|---|---|---|
| 1 | 3 | 0 |
| 2 | 0 | 3 |
| 3 | 3 | 9 |
| 4 | 5 | 18 |
| 5 | 5 | 54 |

# Complexity, Cx, Reliability, and Persistence

# Commissioning; a Path to a Successful Control System

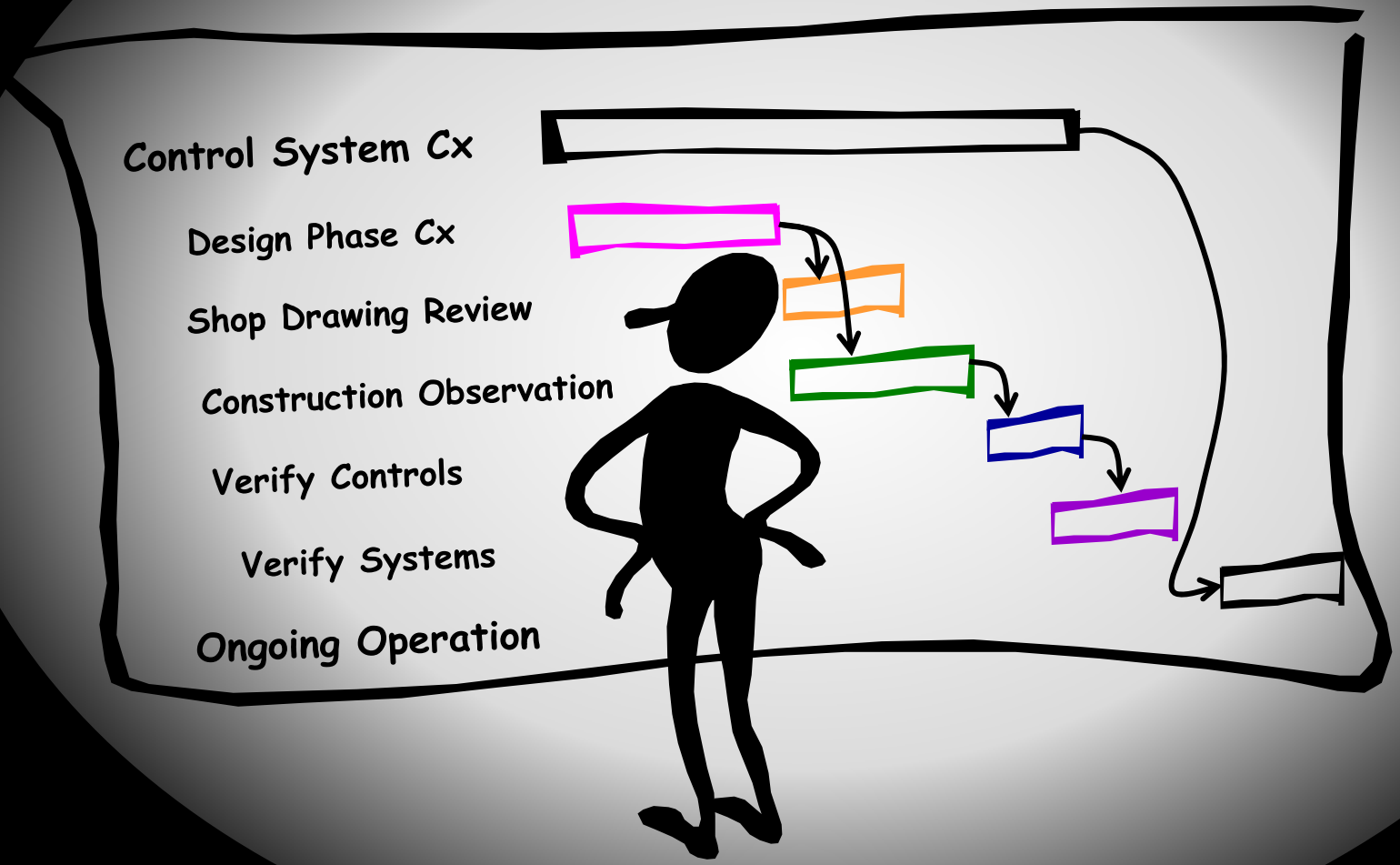

# Design Review

- Identify and document the design intent
- Bring the integration perspective to the project
- Bring the field perspective to the project
- Identify savings opportunities that will be lost if not captured during design

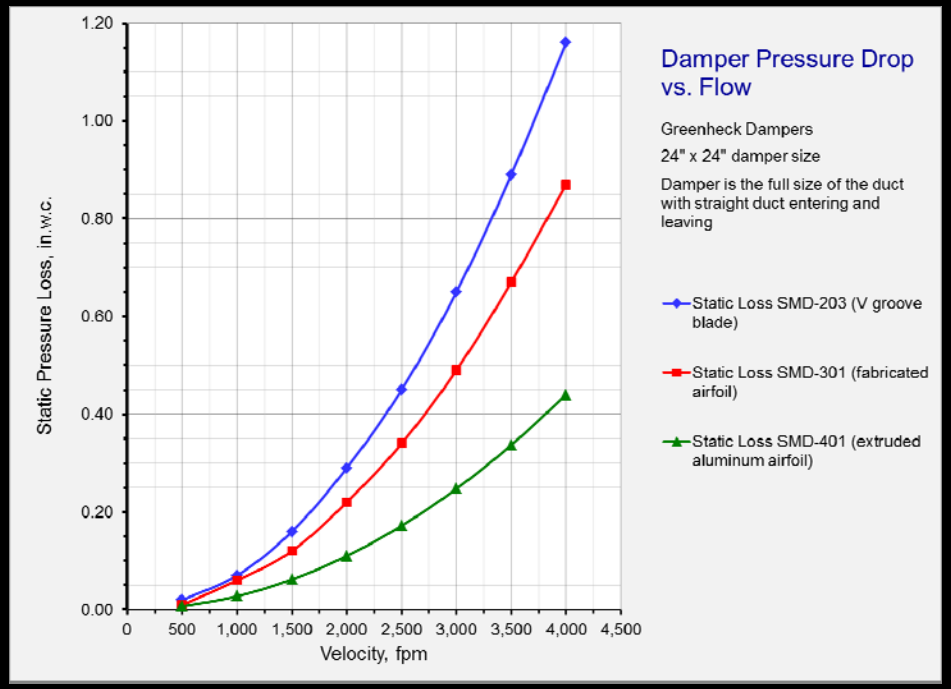

# What Should You Expect to See

Key elements

- Points required for control
- Points required for Cx and operations/persistence
- Points coordinated with various divisions (self contained equipment, fire alarm, metering, etc.)
- Trending and archiving requirements
- Set points (fixed and reset)
- Accuracy requirements
- Sensor locations on a system diagram
- Valve and damper schedules
- Detailed sequences covering all contingencies

# What Should You Expect to See

Extras

- Point names and numbers per Owners conventions
- Alarm requirements
- Logic diagrams
- Network architecture
- Floor plans with panels, sensors, and wiring runs shown
- Details

# Submittal Review

- Concepts are about to become reality; good time to make sure you are creating the right reality
  - Point names
  - Program logic
  - Set points
  - Alarms
  - Remote access
  - Sensor and actuator details
    - Location
    - Accuracy
    - Calibration
    - Speed

- See *The Controls Integration Meeting* by Karl Stum and Norm Nelson; NCBC 2004 Proceedings; Available at BCxA.org/BNCBC and CACx.org

# Construction Observation

A great time to spot check important details that are crucial to the success of your control sequences

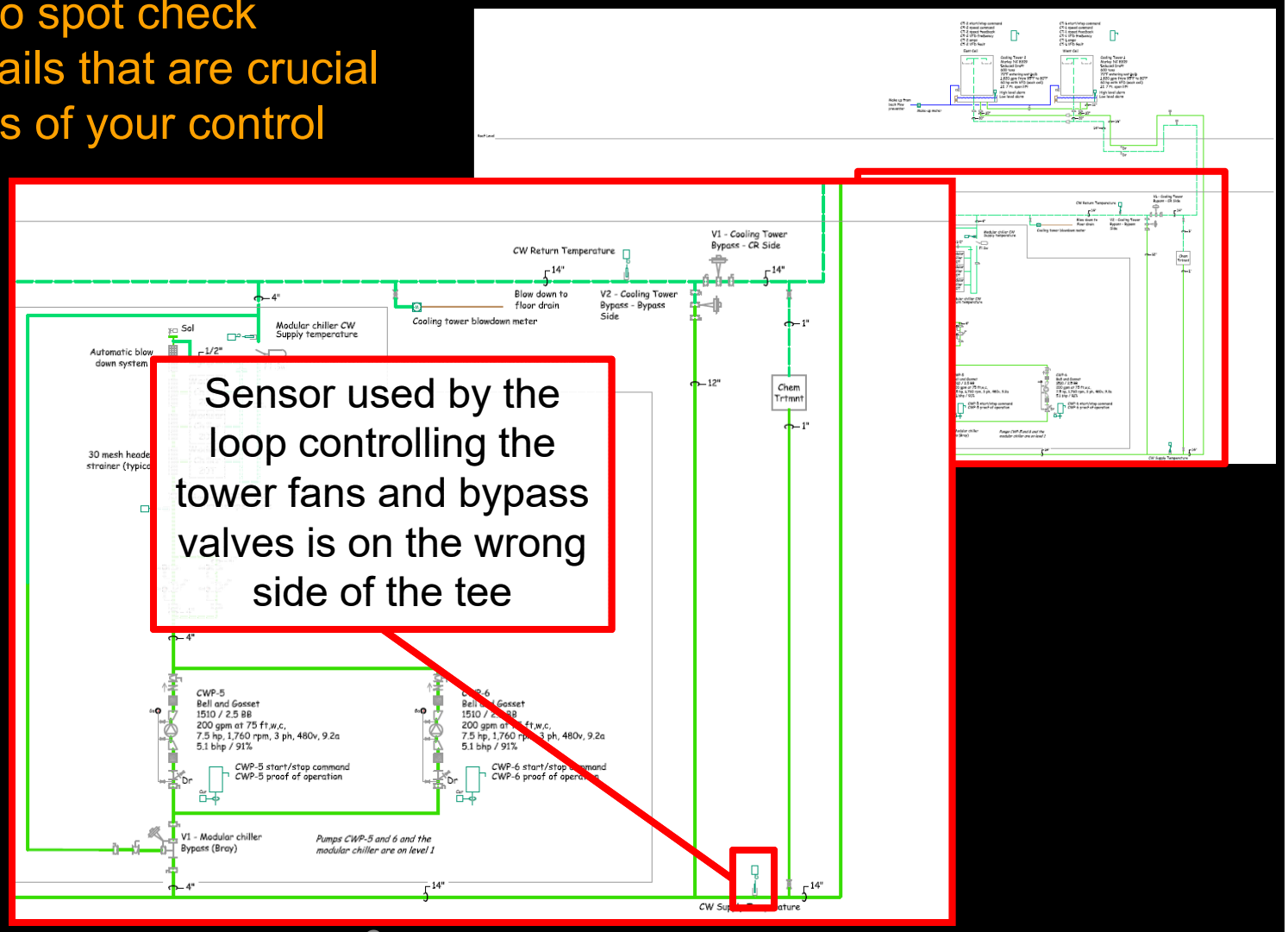

# Construction Observation

A great time to spot check important details that are crucial to the success of your control sequences

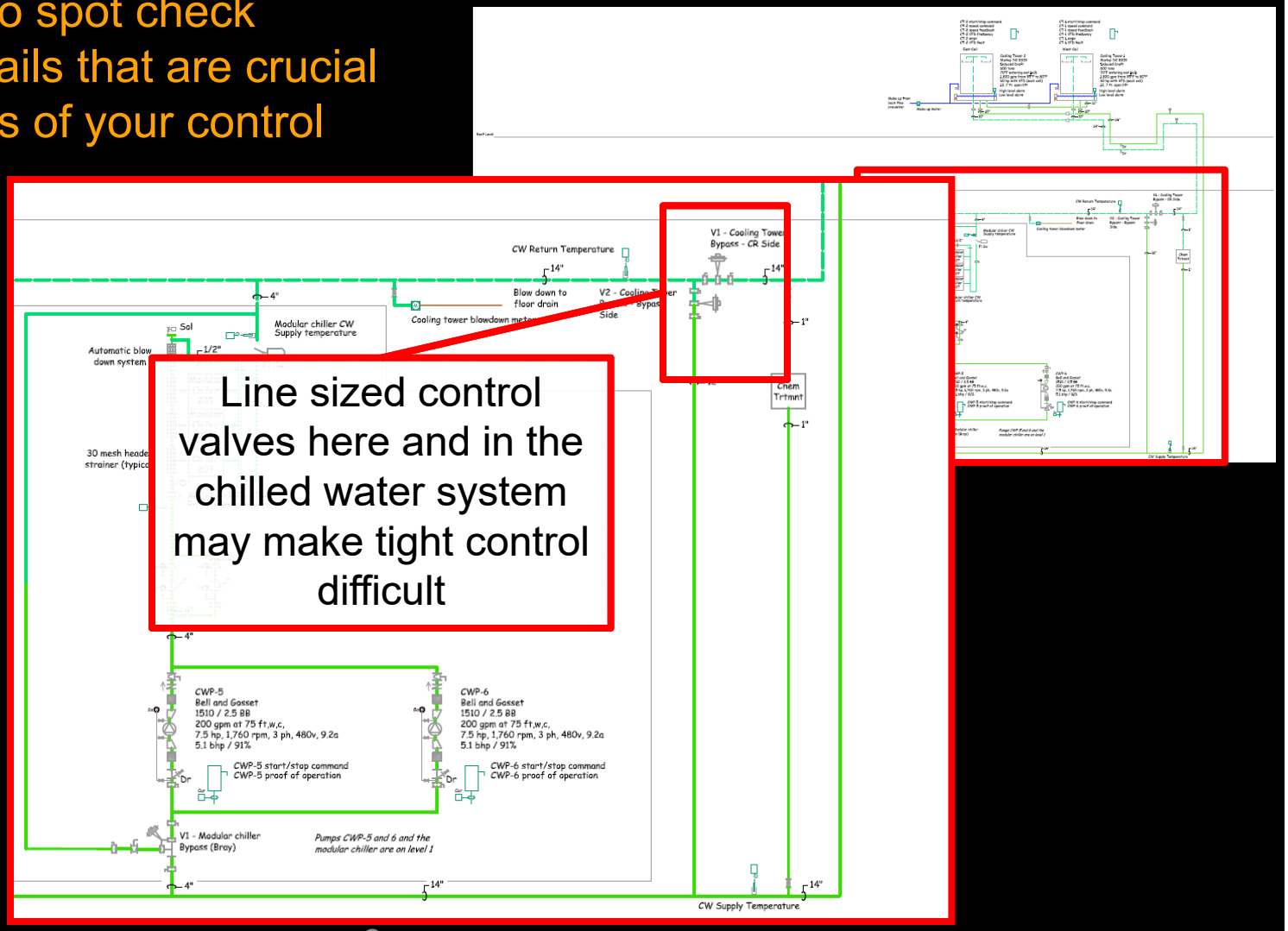


Line sized control valves here and in the chilled water system may make tight control difficult

# Is the System Accessible From the Internet?

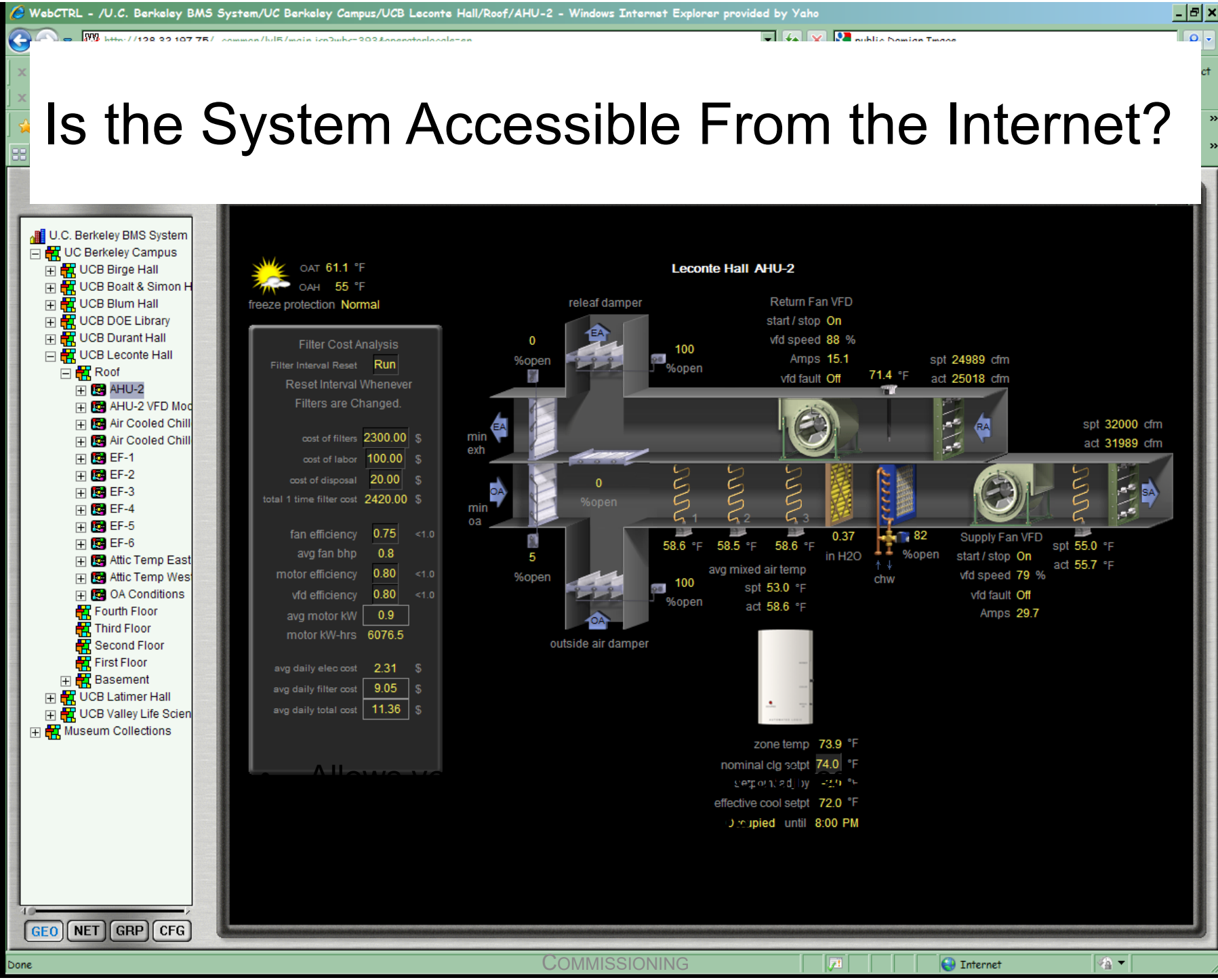

# Verify Control Logic

## A Good Starting Point for Commissioning the Control System

- Verifies the *required* software is installed and that it matches the *approved* software
  - Harder with some forms of software than others

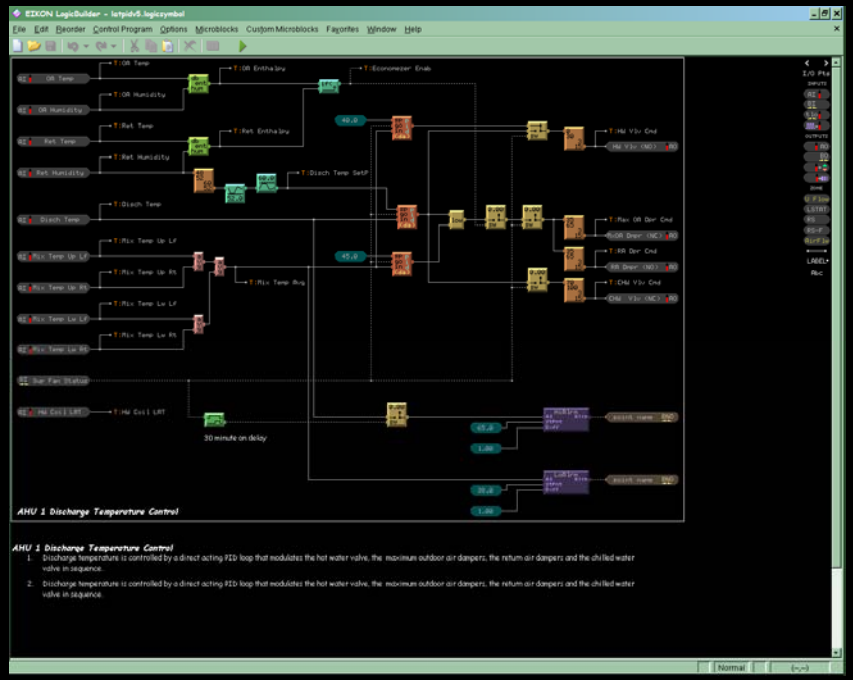


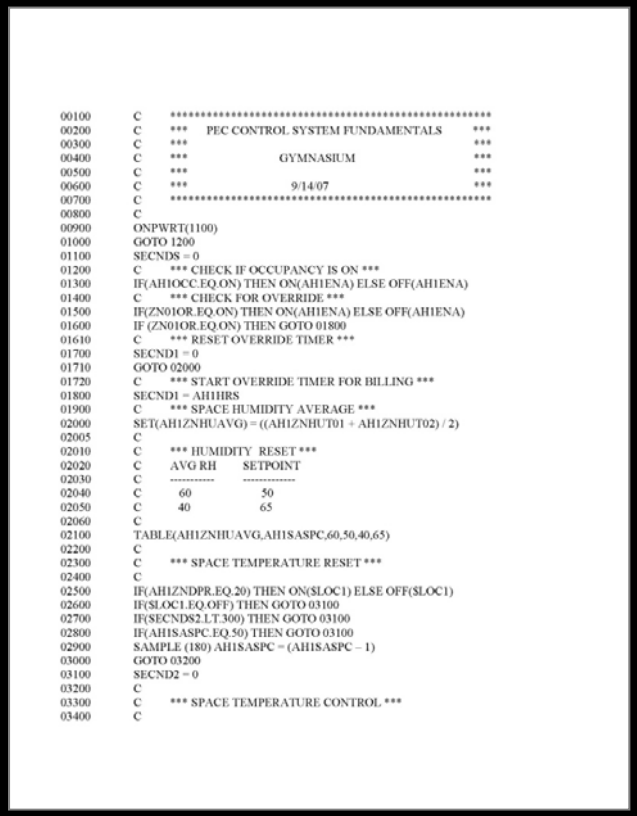

```
C     ***************************************************
C     ***    PEC CONTROL SYSTEM FUNDAMENTALS          ***
C     ***                                             ***
C     ***                GYMNASIUM                    ***
C     ***                                             ***
C     ***                  9/14/07                    ***
C     ***************************************************
C
ONPWRT(1100)
GOTO 1200
SECNDS = 0
C     *** CHECK IF OCCUPANCY IS ON ***
IF(AH1OCC.EQ.ON) THEN ON(AH1ENA) ELSE OFF(AH1ENA)
C     *** CHECK FOR OVERRIDE ***
IF(ZN01OR.EQ.ON) THEN ON(AH1ENA) ELSE OFF(AH1ENA)
IF (ZN01OR.EQ.ON) THEN GOTO 01800
C     *** RESET OVERRIDE TIMER ***
SECND1 = 0
GOTO 02000
C     *** START OVERRIDE TIMER FOR BILLING ***
SECND1 = AH1HRS
C     *** SPACE HUMIDITY AVERAGE ***
SET(AH1ZNHUAVG) = ((AH1ZNHUT01 + AH1ZNHUT02) / 2)
C
C     *** HUMIDITY  RESET ***
C     AVG RH      SETPOINT
C     ----------  ----------
C      60          50
C      40          65
C
TABLE(AH1ZNHUAVG,AH1SASPC,60,50,40,65)
C
C     *** SPACE TEMPERATURE RESET ***
C
IF(AH1ZNDPR.EQ.20) THEN ON($LOC1) ELSE OFF($LOC1)
IF($LOC1.EQ.OFF) THEN GOTO 03100
IF($SECNDS2.LT.300) THEN GOTO 03100
IF(AH1SASPC.EQ.50) THEN GOTO 03100
SAMPLE (180) AH1SASPC = (AH1SASPC - 1)
GOTO 03200
SECND2 = 0
C
C     *** SPACE TEMPERATURE CONTROL ***
C
```

See *A Free Control Logic Development Resource* posted in November of 2010 on the *Field Perspective on Engineering* blog for a logic diagram tool that lets you do simulations

# Verify Input/Output Details

- Calibration
- Visible and commandable from the operator work station
- Accuracy/span/start-point appropriate and meets project specifications
- Accessible
- Labeled correctly
- Manual over-rides:
  - Provided where appropriate
  - Coordinated with other over-rides
  - Function
- Valves and dampers close completely
- Safety interlocks
  - Hardwired
  - Function irrespective of selector switch position
- Valves and dampers open fully
- Failure positions (normally open, normally closed, etc.) are appropriate and meet project specifications
- Network points are mapped appropriately
- Points have required alarms

# Loops Have Been Tuned and Are Stable Under All Load Conditions

- Loops stabilize at the new set point in a reasonable time after and upset
  - Quarter decay ratio
  - Tuned in Summer ≠ Stable next Fall and Winter
- Systems can start and stop without anxiety and achieve stable operation in a reasonable time
- P,I, and D gains are not at factory defaults
- I and D are only applied where appropriate

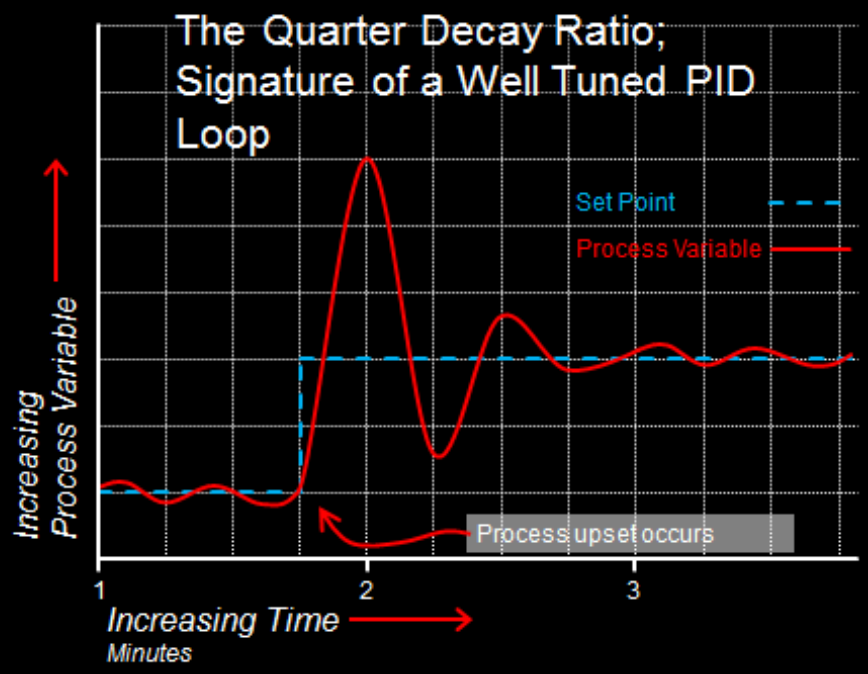

# Operator Work Station Functionality

- Critical parameters are accessible and adjustable
- Operator access levels are appropriate
- Graphics are accurate and sufficiently fast
- Back-up methodology is in place
- Alarm handling is appropriately managed

# Power Failure Response

- Control and Controlled System
  - Acceptable response on loss of control power
  - Acceptable recovery sequence upon re-application of power
- Power source documented and verified
- Remember, power failures can be a localize event

*Image by C. Clark courtesy NOAA Photo Library, NOAA Central Library; OAR/ERL/National Severe Storms Laboratory (NSSL)*

# Verify Communications

- With the system operating, a loss of communications with the network does not result in damage to the system or loads it serves
- When communications are restored, the system reacts in an orderly manner

# Points Required for Cx and Ongoing Diagnostics are Available and Functional

- Trending with appropriate sample times or change of value limits
- Archived

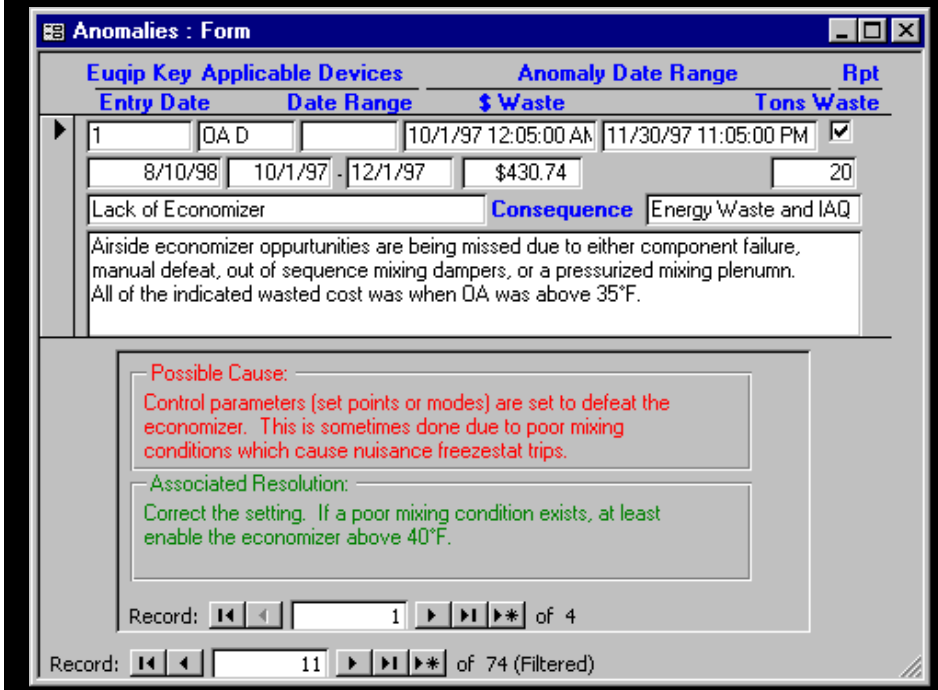


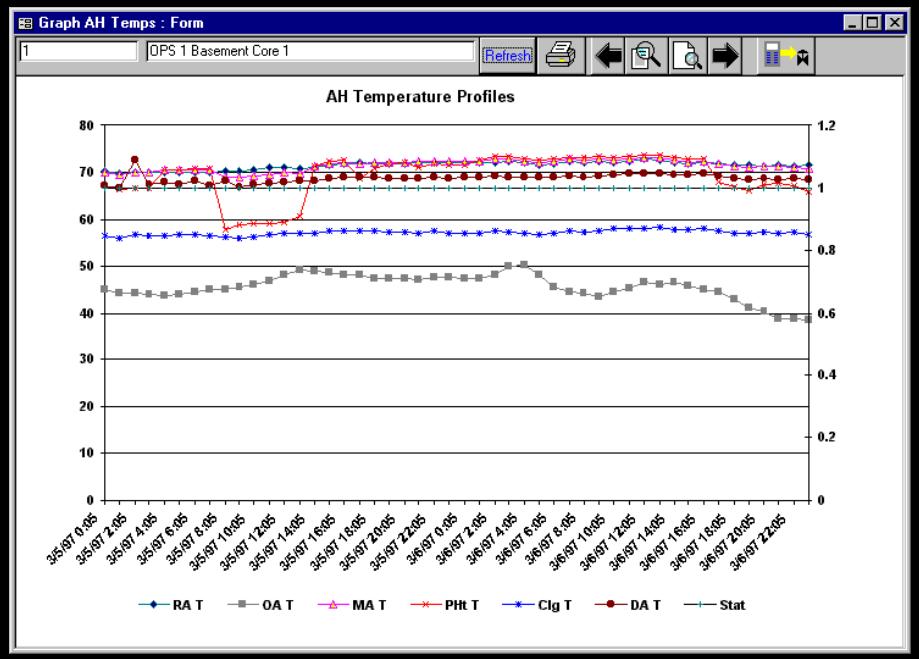

# Verify System Response Times

- Network architecture verification with out the IT department
- Specify what you know
  - Trending sampling rates and archiving for each point
  - Graphic update times
  - Command response times
  - Change of value reporting times
- Test for what you specified

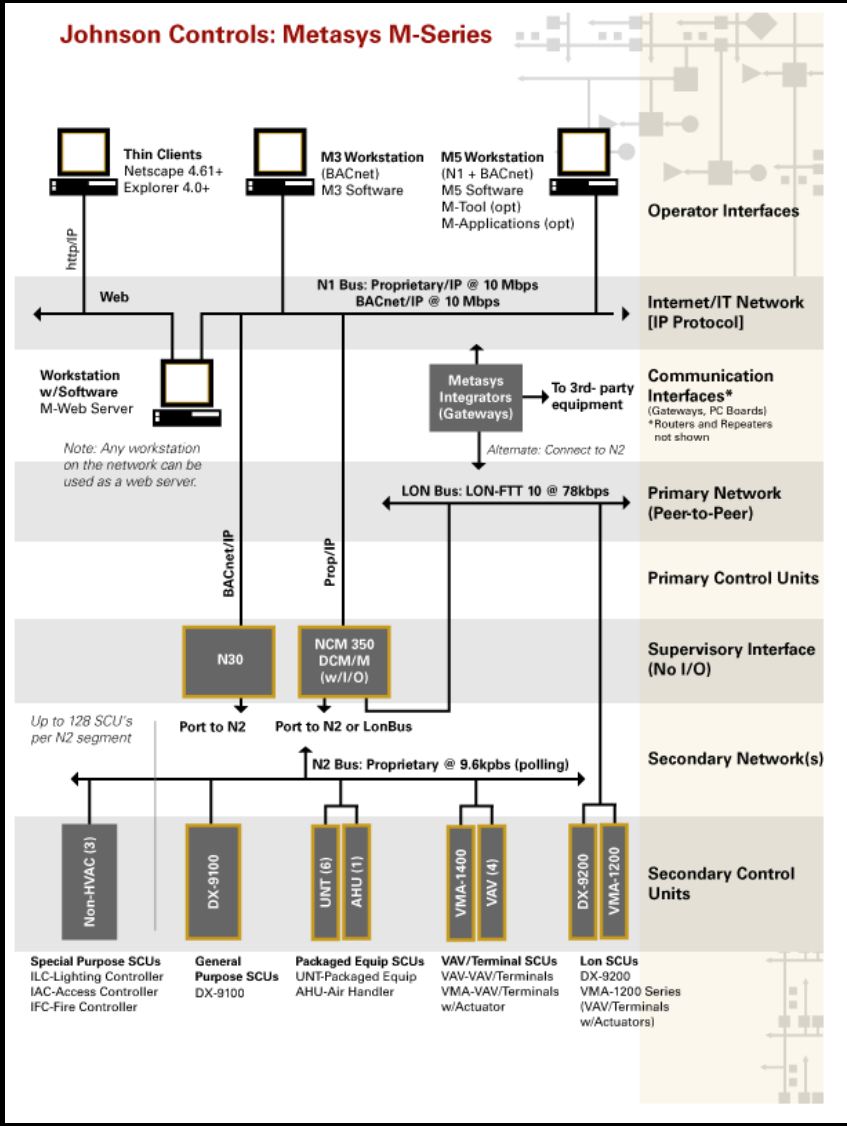

# Verify Input/Output Details

## Calibration

# PID Controller Tuning

- Roots of the process are in *Optimum Settings for Automatic Controllers*
  - John G. Ziegler
  - Nathan B. Nichols
  - 1940
  - Ziegler-Nichols Method

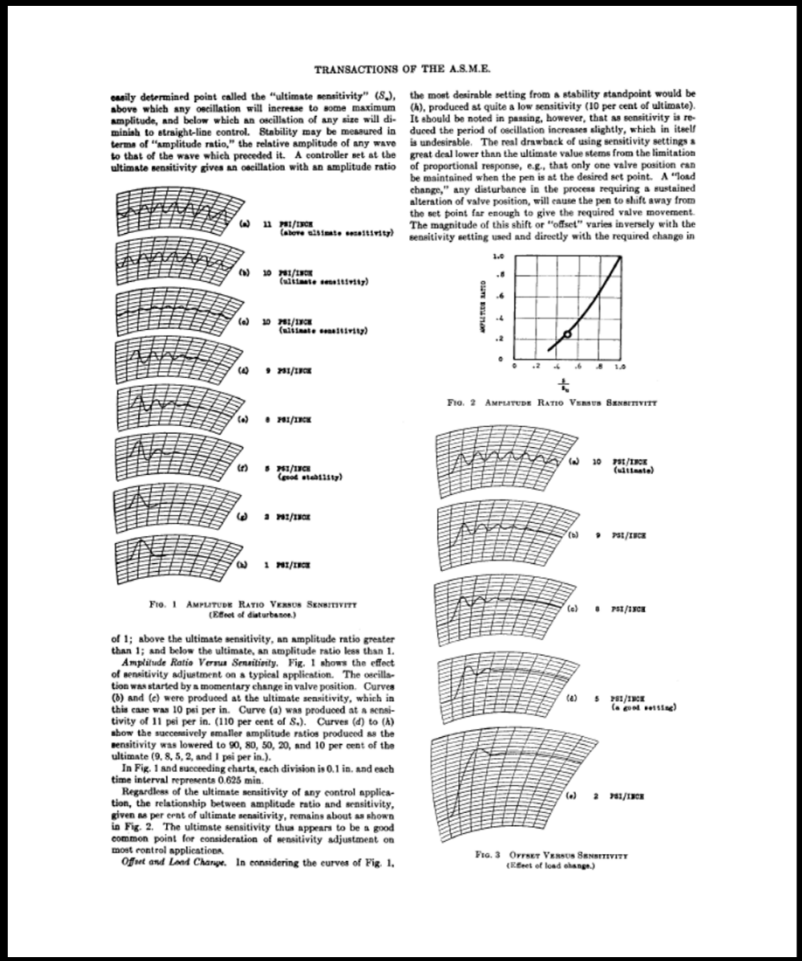

TRANSACTIONS OF THE A.S.M.E.

easily determined point called the "ultimate sensitivity" ($S_u$), above which any oscillation will increase to some maximum amplitude, and below which an oscillation of any size will diminish to straight-line control. Stability may be measured in terms of "amplitude ratio," the relative amplitude of any wave to that of the wave which preceded it. A controller set at the ultimate sensitivity gives an oscillation with an amplitude ratio of 1; above the ultimate sensitivity, an amplitude ratio greater than 1; and below the ultimate, an amplitude ratio less than 1.

*Amplitude Ratio Versus Sensitivity.* Fig. 1 shows the effect of sensitivity adjustment on a typical application. The oscillation was started by a momentary change in valve position. Curves (b) and (c) were produced at the ultimate sensitivity, which in this case was 10 psi per in. Curve (a) was produced at a sensitivity of 11 psi per in. (110 per cent of $S_u$). Curves (d) to (h) show the successively smaller amplitude ratios produced as the sensitivity was lowered to 90, 80, 50, 20, and 10 per cent of the ultimate (9, 8, 5, 2, and 1 psi per in.).

In Fig. 1 and succeeding charts, each division is 0.1 in. and each time interval represents 0.625 min.

Regardless of the ultimate sensitivity of any control application, the relationship between amplitude ratio and sensitivity, given as per cent of ultimate sensitivity, remains about as shown in Fig. 2. The ultimate sensitivity thus appears to be a good common point for consideration of sensitivity adjustment on most control applications.

*Offset and Load Change.* In considering the curves of Fig. 1, the most desirable setting from a stability standpoint would be (h), produced at quite a low sensitivity (10 per cent of ultimate). It should be noted in passing, however, that as sensitivity is reduced the period of oscillation increases slightly, which in itself is undesirable. The real drawback of using sensitivity settings a great deal lower than the ultimate value stems from the limitation of proportional response, e.g., that only one valve position can be maintained when the pen is at the desired set point. A "load change," any disturbance in the process requiring a sustained alteration of valve position, will cause the pen to shift away from the set point far enough to give the required valve movement. The magnitude of this shift or "offset" varies inversely with the sensitivity setting used and directly with the required change in

(a) 11 PSI/INCH (above ultimate sensitivity)
(b) 10 PSI/INCH (ultimate sensitivity)
(c) 10 PSI/INCH (ultimate sensitivity)
(d) 9 PSI/INCH
(e) 8 PSI/INCH
(f) 5 PSI/INCH (good stability)
(g) 2 PSI/INCH
(h) 1 PSI/INCH

Fig. 1 Amplitude Ratio Versus Sensitivity (Effect of disturbance.)

Fig. 2 Amplitude Ratio Versus Sensitivity

(a) 10 PSI/INCH (ultimate)
(b) 9 PSI/INCH
(c) 8 PSI/INCH
(d) 5 PSI/INCH (a good setting)
(e) 2 PSI/INCH

Fig. 3 Offset Versus Sensitivity (Effect of load change.)

*Image courtesy Control Engineering Magazine*

# Set Points

Verify that what you have is what you need

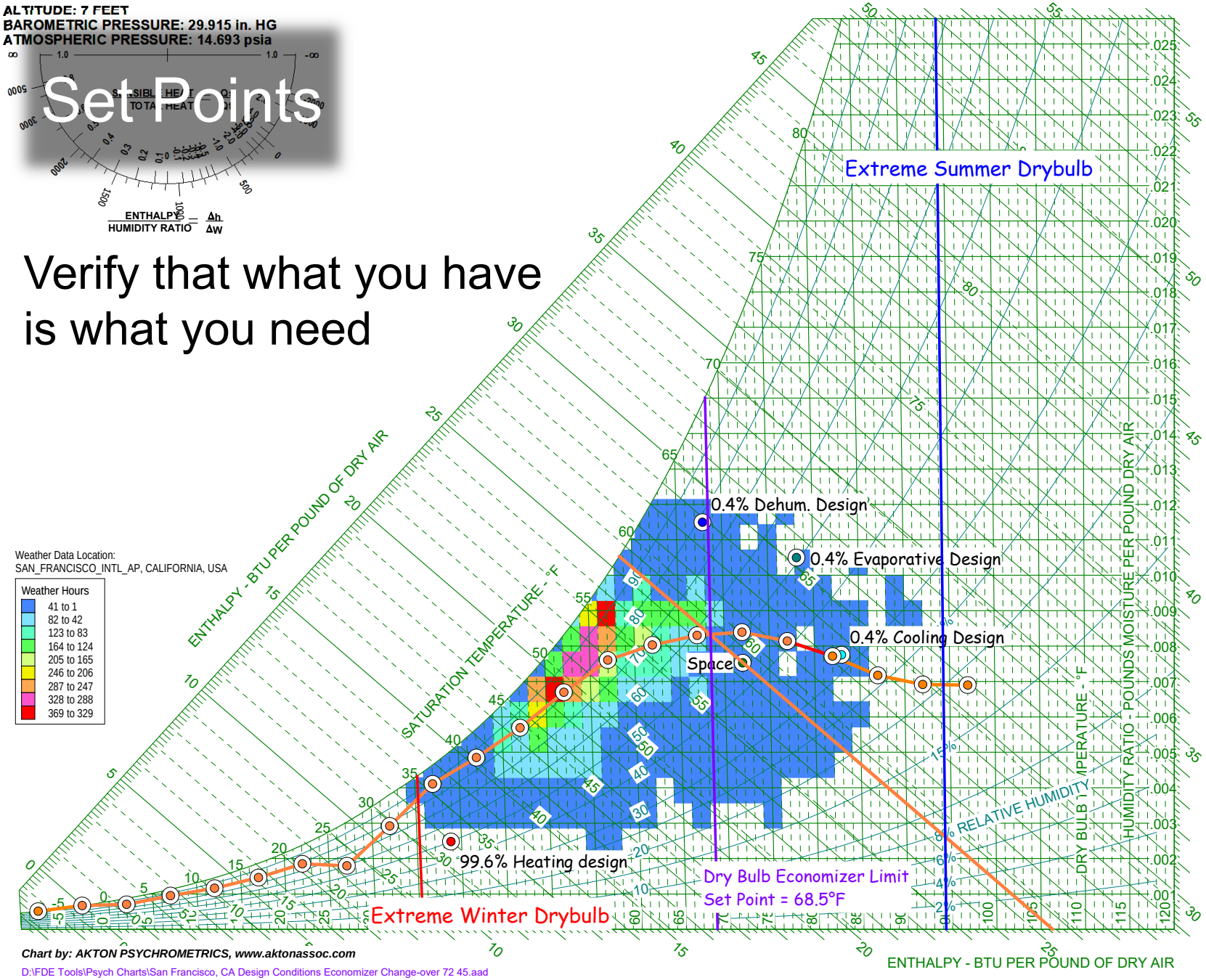

# It All Depends on the Lags

David W. St. Clair

# If You Don’t Commission Things Mother Nature Will

Consider a Day with an Extreme Diurnal Swing and its Impact on the Performance of Sensitive HVAC Processes

# Mother Nature Writes Great Functional Tests

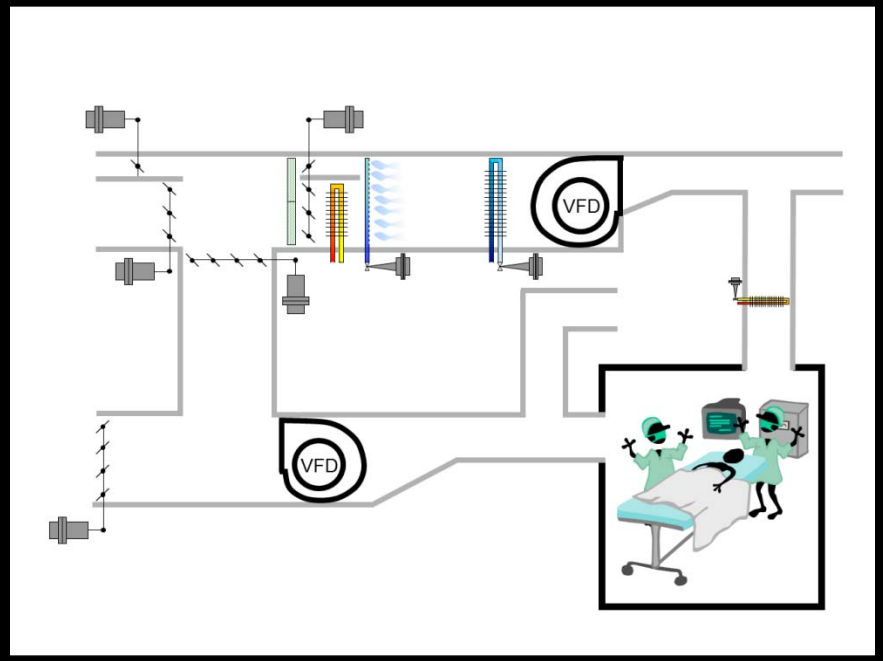


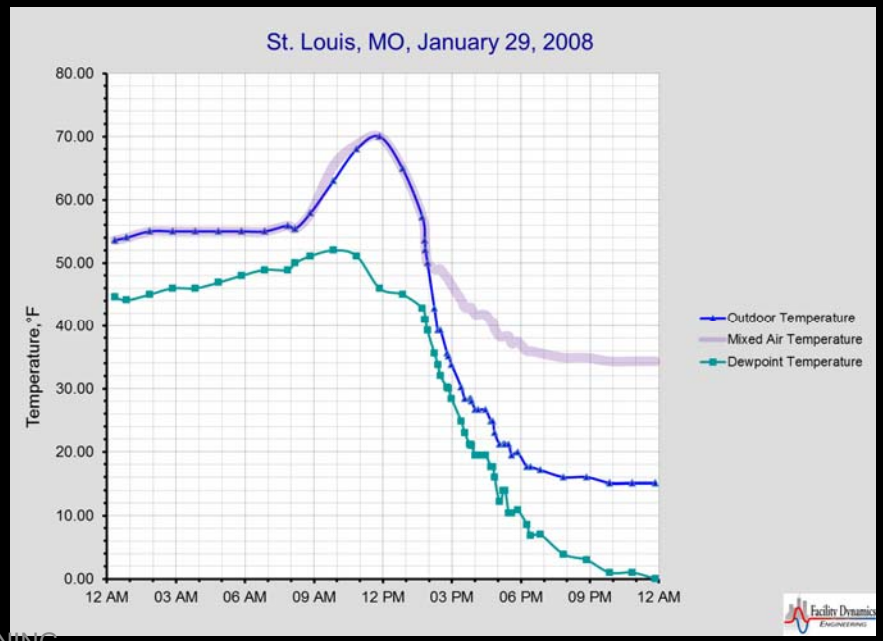

Consider a Day with an Extreme Diurnal Swing and its Impact on the Performance of Sensitive HVAC Processes

# Mother Nature Writes Great Functional Tests

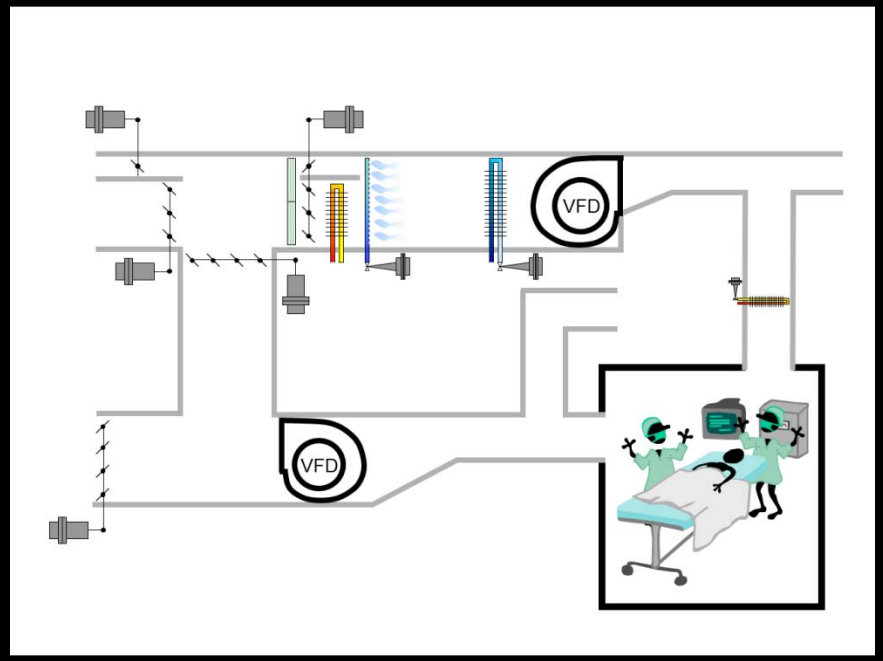


100% Outdoor Air with Humidification

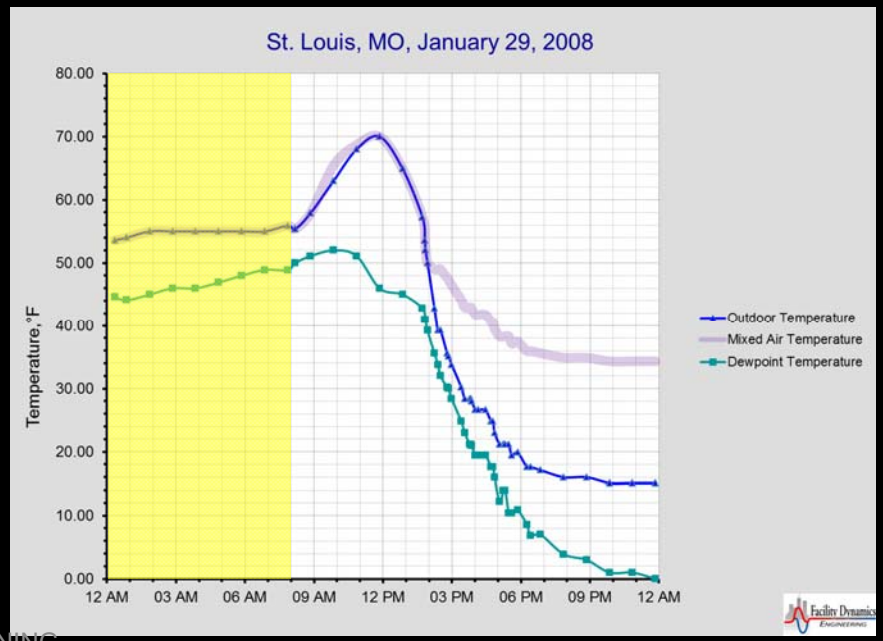

Consider a Day with an Extreme Diurnal Swing and its Impact on the Performance of Sensitive HVAC Processes

# Mother Nature Writes Great Functional Tests

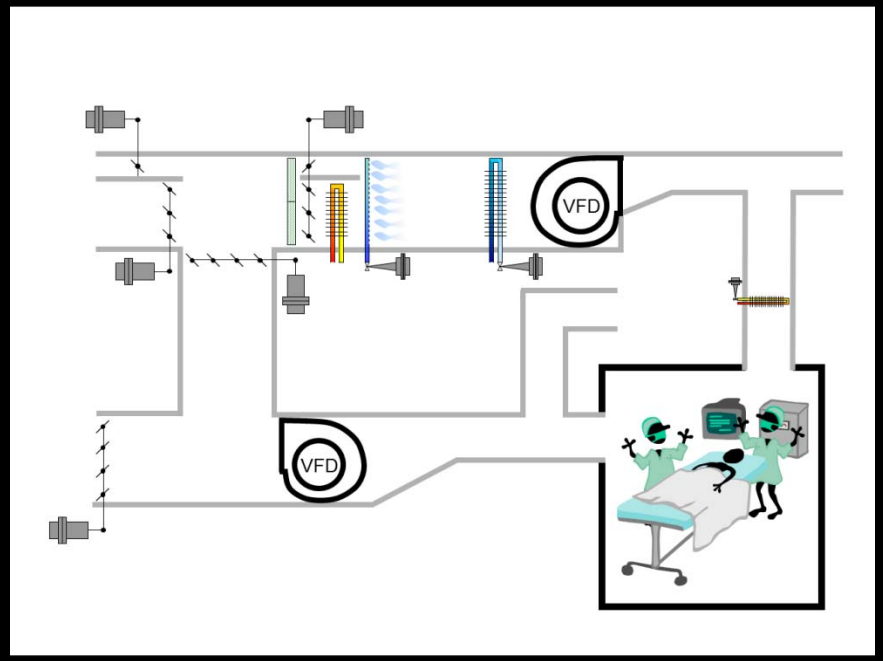


100% Outdoor Air

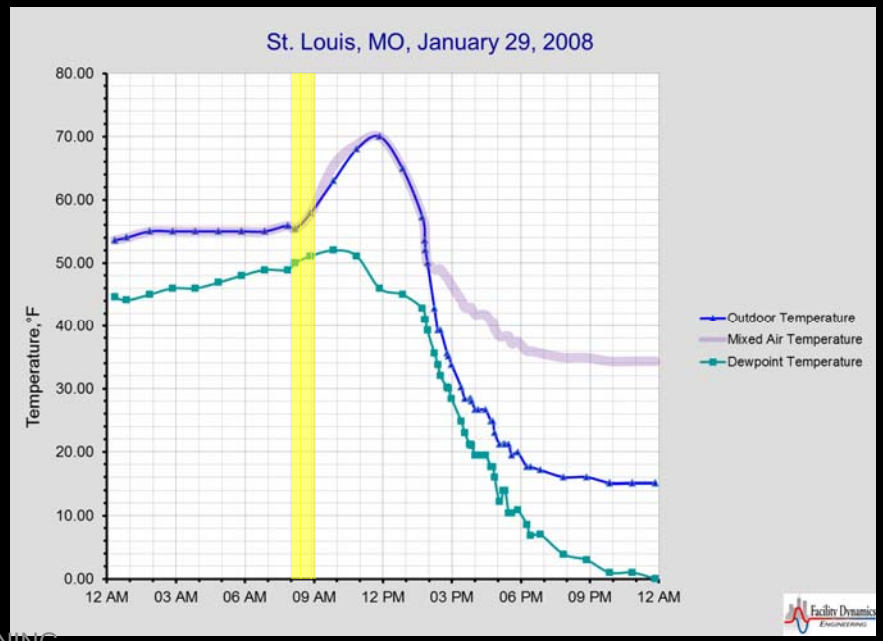

Consider a Day with an Extreme Diurnal Swing and its Impact on the Performance of Sensitive HVAC Processes

# Mother Nature Writes Great Functional Tests

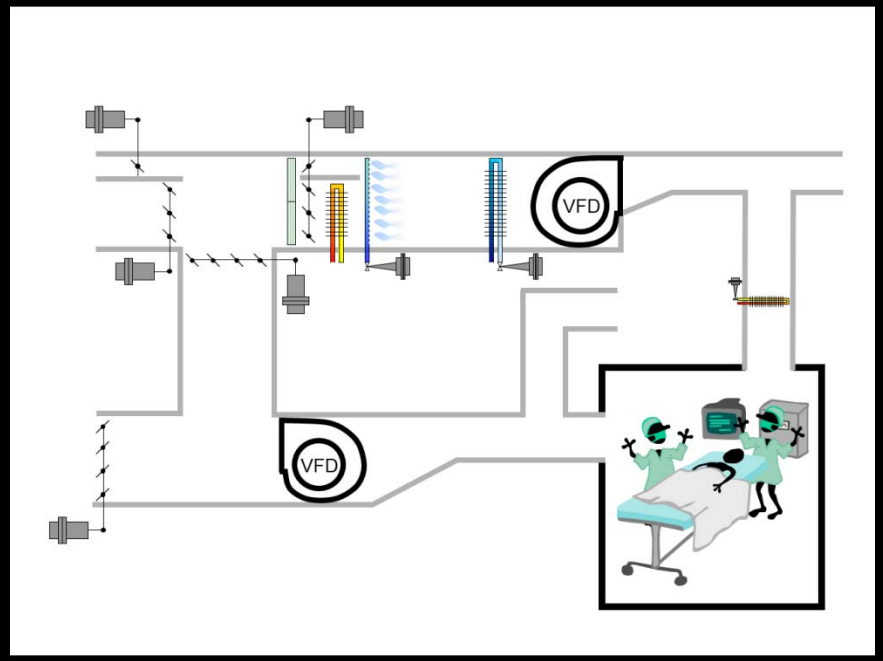


Enthalpy Driven Change-over to Minimum Outdoor Air

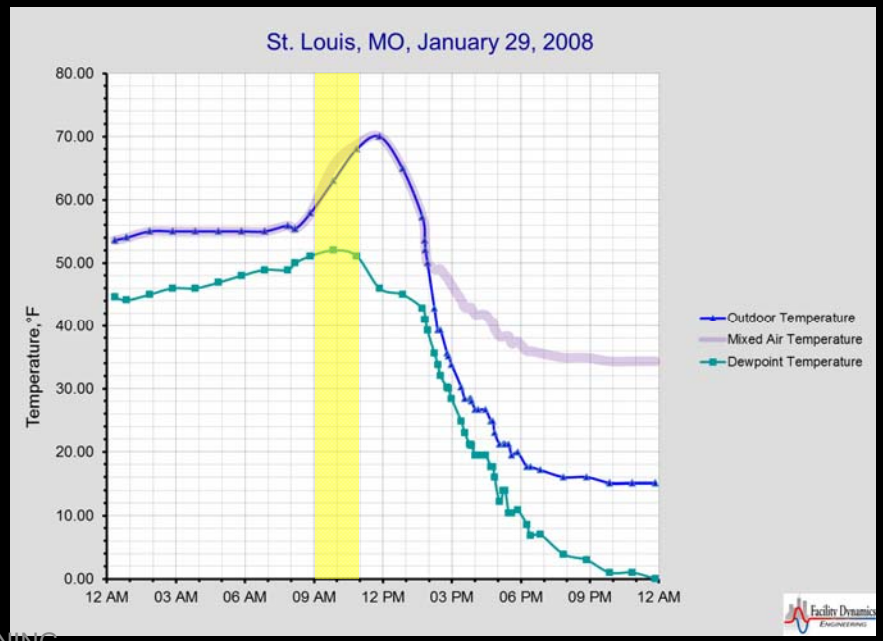

Consider a Day with an Extreme Diurnal Swing and its Impact on the Performance of Sensitive HVAC Processes

# Mother Nature Writes Great Functional Tests

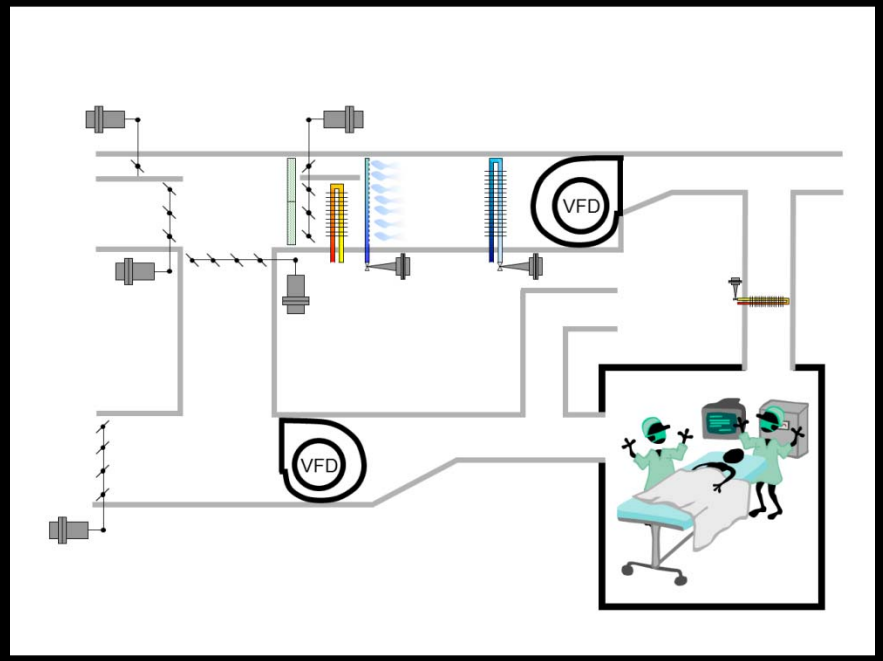


Minimum Outdoor Air with Humidification

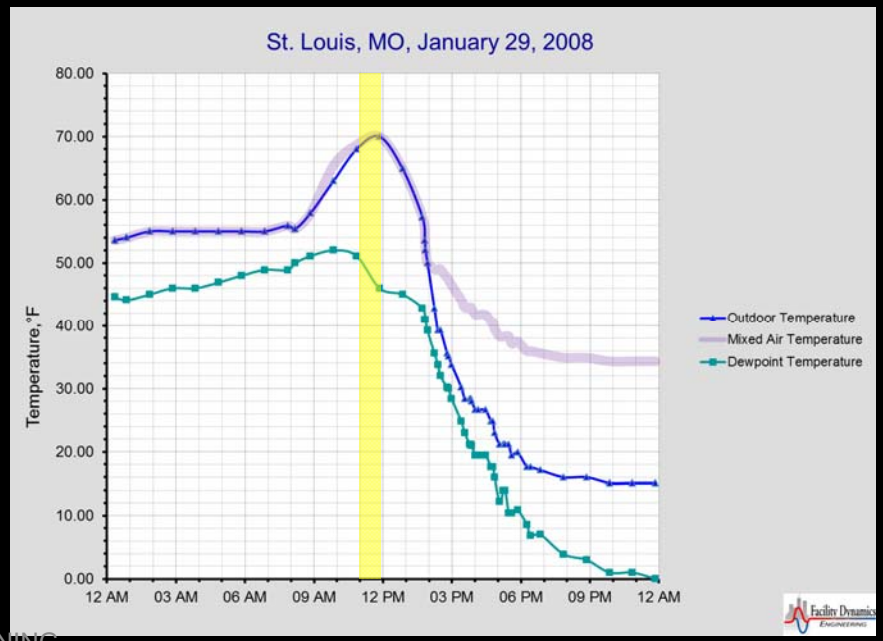

Consider a Day with an Extreme Diurnal Swing and its Impact on the Performance of Sensitive HVAC Processes

# Mother Nature Writes Great Functional Tests

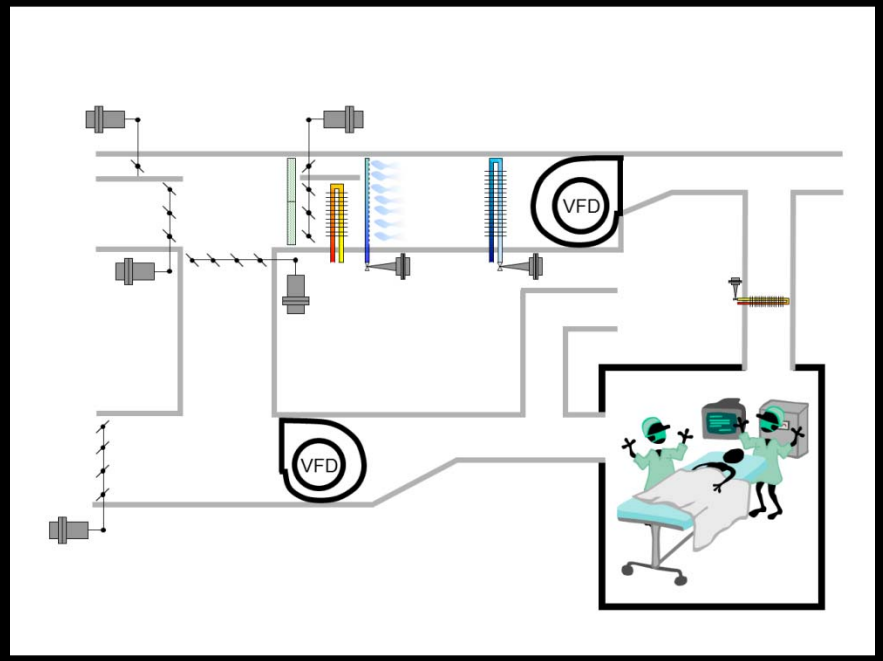


Enthalpy Driven Change-over to 100% Outdoor Air, Humidification

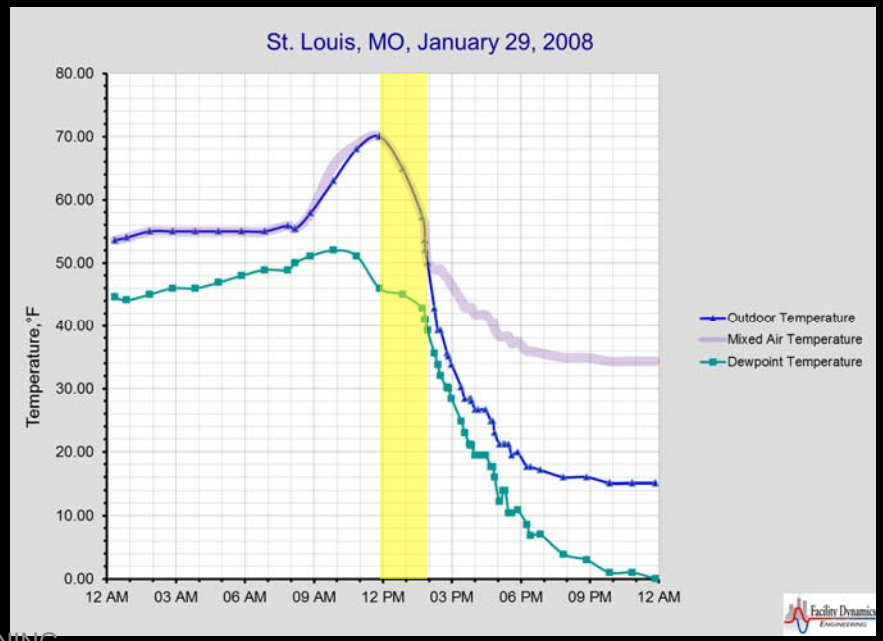

Consider a Day with an Extreme Diurnal Swing and its Impact on the Performance of Sensitive HVAC Processes

# Mother Nature Writes Great Functional Tests

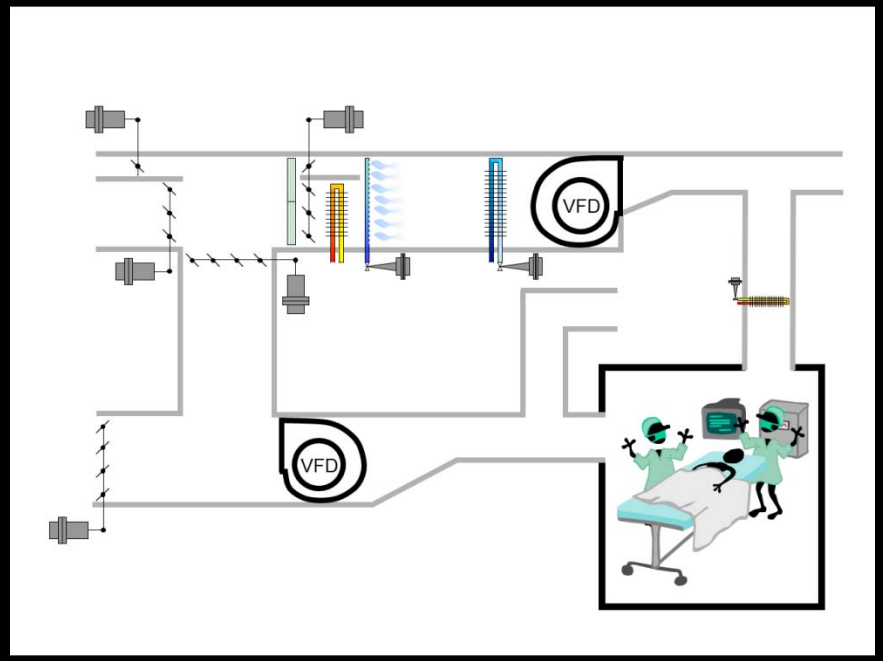


Economizer Modulates with Humidification

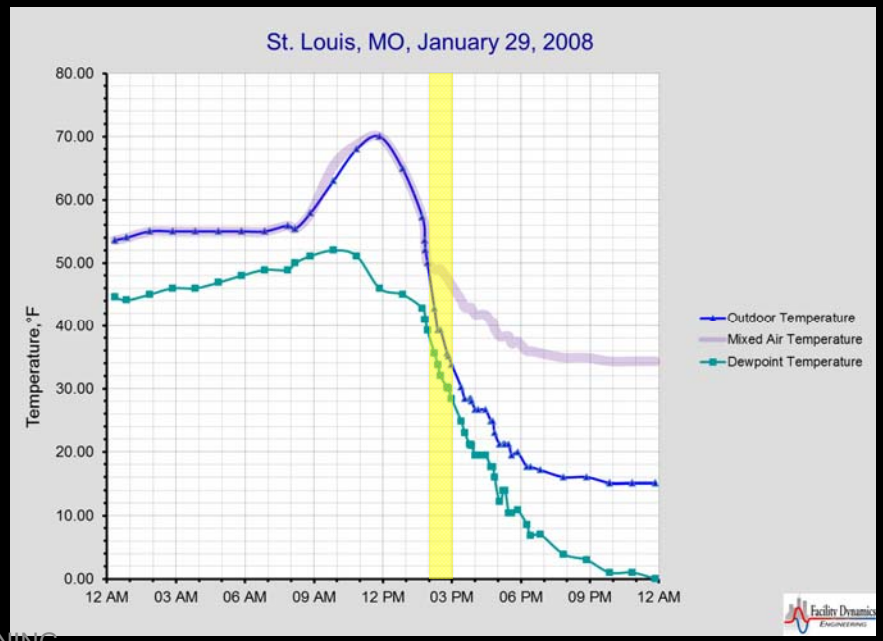

Consider a Day with an Extreme Diurnal Swing and its Impact on the Performance of Sensitive HVAC Processes

# Mother Nature Writes Great Functional Tests

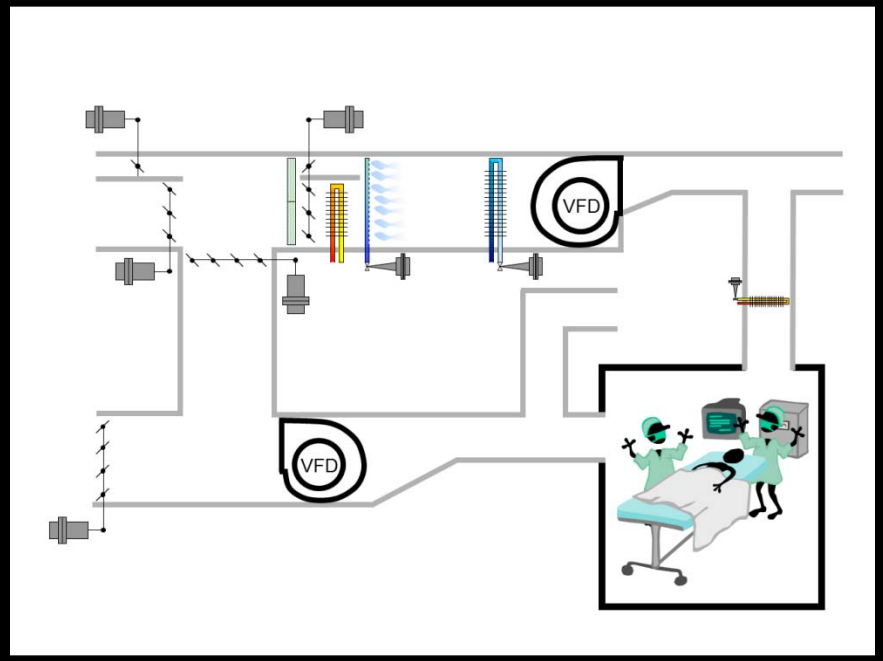


Minimum Outdoor Air with Preheat and Humidification

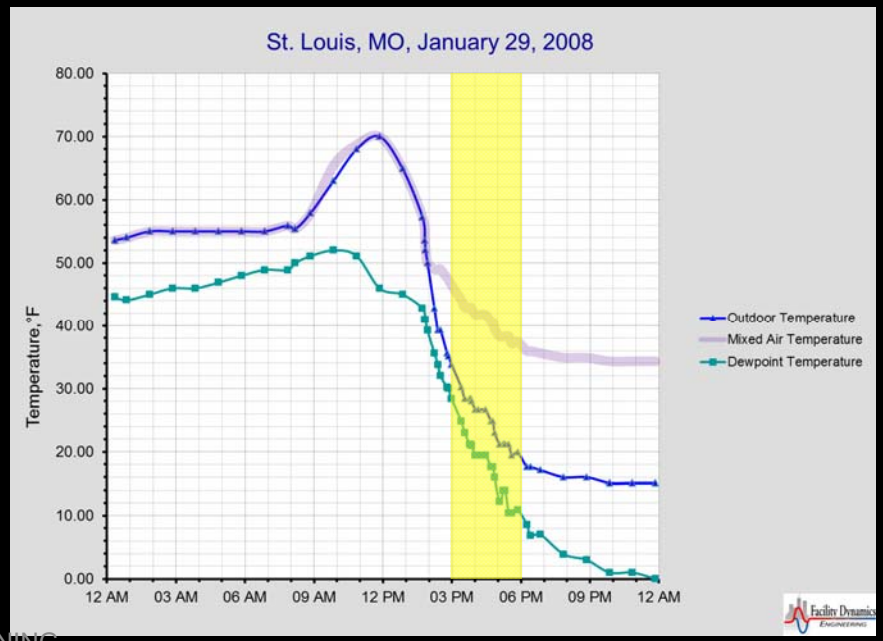

Consider a Day with an Extreme Diurnal Swing and its Impact on the Performance of Sensitive HVAC Processes

# Mother Nature Writes Great Functional Tests

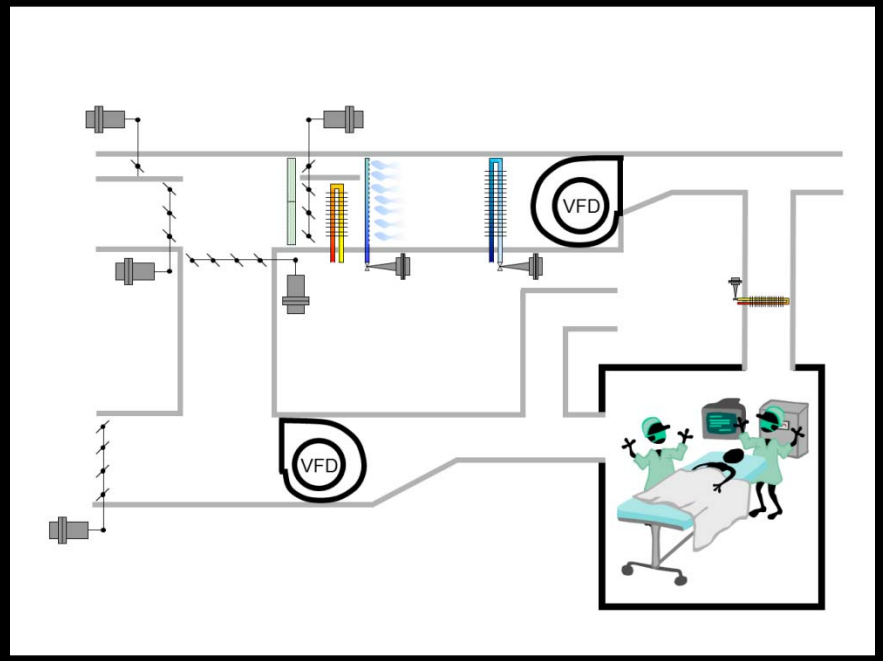

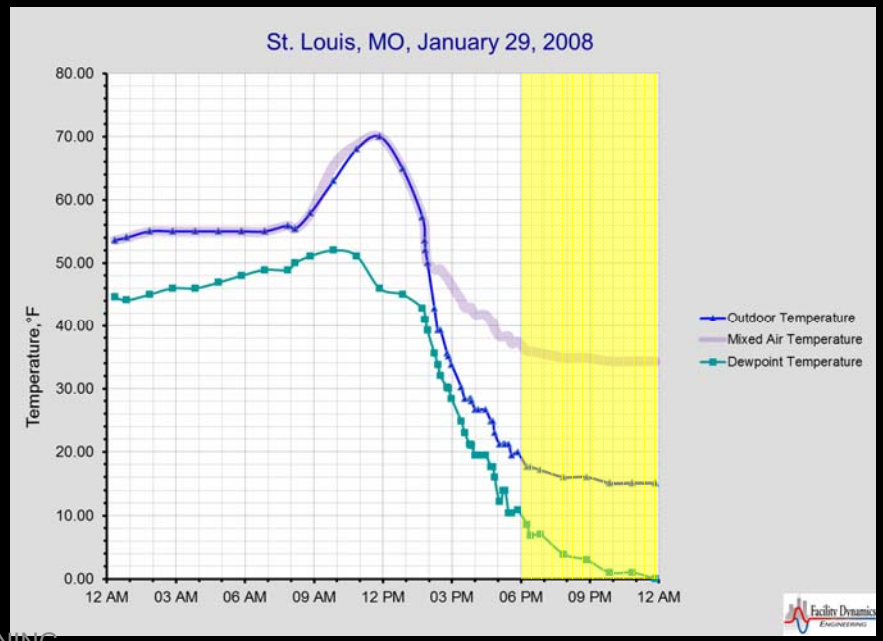
Minimum Outdoor Air with Preheat and Humidification; Freezestat trips if the Preheat Process Fails