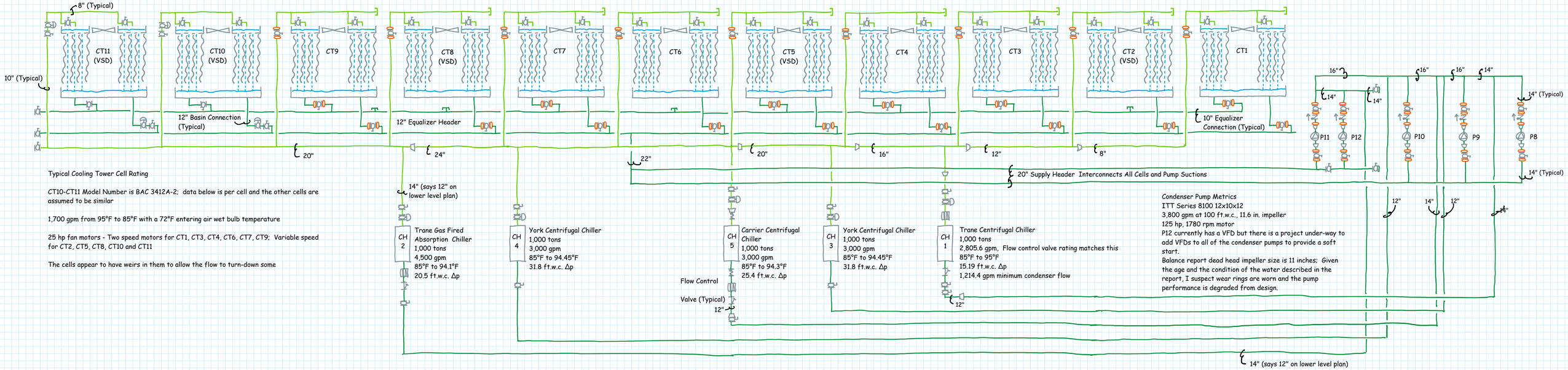


Typical Cooling Tower Cell Rating

CT10-CT11 Model Number is BAC 3412A-2; data below is per cell and the other cells are assumed to be similar

1,700 gpm from 95°F to 85°F with a 72°F entering air wet bulb temperature

25 hp fan motors - Two speed motors for CT1, CT3, CT4, CT6, CT7, CT9; Variable speed for CT2, CT5, CT8, CT10 and CT11

The cells appear to have weirs in them to allow the flow to turn-down some

Condenser Pump Metrics
ITT Series 8100 12x10x12
3,800 gpm at 100 ft.w.c., 11.6 in. impeller
125 hp, 1780 rpm motor
P12 currently has a VFD but there is a project under-way to add VFDs to all of the condenser pumps to provide a soft start.
Balance report dead head impeller size is 11 inches; Given the age and the condition of the water described in the report, I suspect wear rings are worn and the pump performance is degraded from design.